Packaging & Delivery

Packaging Detail:	Carton and plastic foam and tape packaging
Delivery Detail:	5-15 days after get payment

Specifications

1.Type:best quality wall mounting aluminum pcb enclosure
2. Model No. AK-C-A30
3. Size:33.5x103xfree(mm) 1.32"x4.06"xfree

Introduction of wall mounting aluminum pcb enclosure

The wall mounting aluminum pcb enclosure is used as an anode, placed in electrolyte, artificially formed the enclosure having a protective aluminum oxide film on the surface.

wall mounting aluminum pcb enclosure material features:

1. Has a strong resistance to abrasion, weathering, corrosion.

2. Can be formed on the surface of a variety of colors, to maximize fit your requirements.

3. Have a strong hardness, can be well protected your electronics.

best quality wall mounting aluminum pcb enclosure

Brand:SZOMK

Type:best quality wall mounting aluminum pcb enclosure

Material:aluminum

Model No. AK-C-A30

Size: 33.5x103xfree(mm) 1.32"x4.06"xfree

Color:silvery

Customize MOQ: 20 pieces

SZOMK

SZOMK

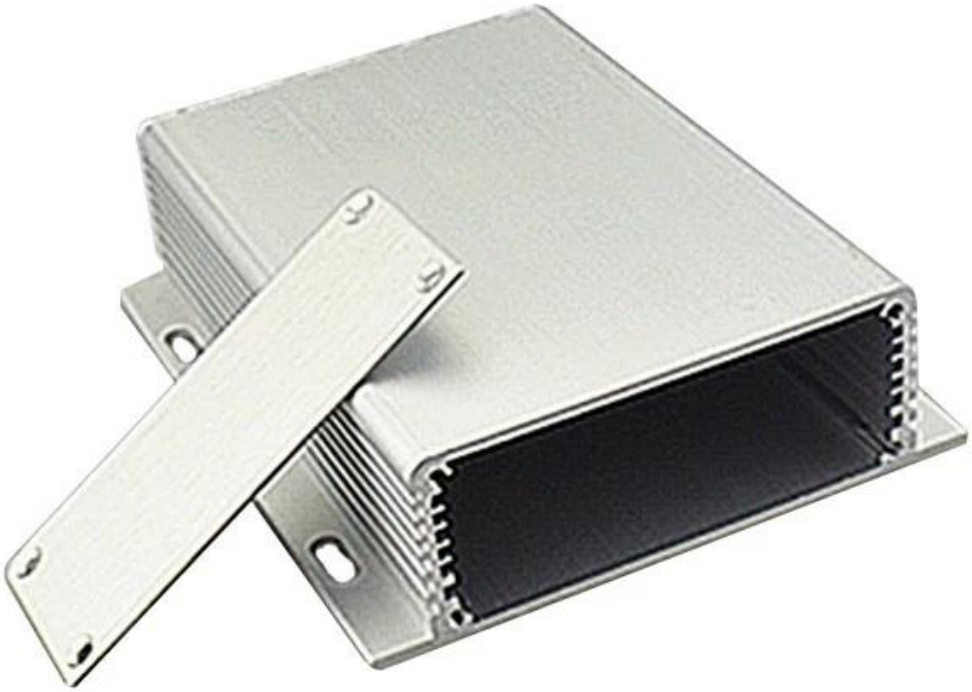

SZOMK

SZOMK

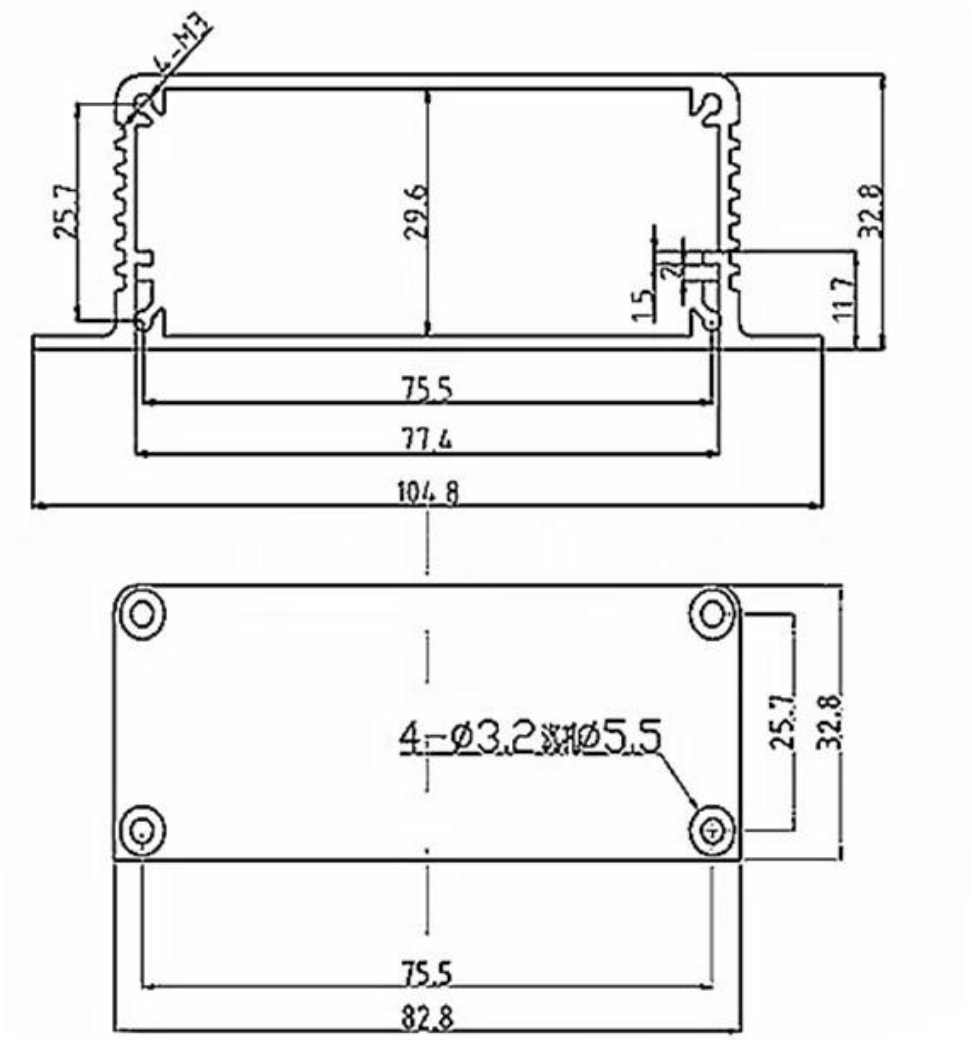

Wall-mounting series

Size List:HxWxfree(mm)

Length can be random

AK-C-A1	36x147	AK-C-A17	40.5x97
AK-C-A2	41x147	AK-C-A18	80x234
AK-C-A3	29x129	AK-C-A19	40x80.5
AK-C-A4	28x104	AK-C-A20	33x105
AK-C-A5	32x155	AK-C-A21	39x96
AK-C-A6	71x190	AK-C-A22	24x76
AK-C-A7	46x190	AK-C-A23	58x180
AK-C-A8	38x88	AK-C-A24	29x164
AK-C-A9	48x204	AK-C-A25	61x147
AK-C-A10	38x150	AK-C-A26	35x120
AK-C-A11	55x150	AK-C-A27	36x85
AK-C-A12	45x138	AK-C-A28	28x165
AK-C-A13	55x147	AK-C-A29	52x165
AK-C-A14	30x67	AK-C-A30	33.5x103
AK-C-A15	73.5x250	AK-C-A31	39x144
AK-C-A16	24x80	AK-C-A32	26x66

Nomal series

Size List:HxWxfree(mm)

Length can be random

AK-C-B1	45x70	AK-C-B33	35x80
AK-C-B2	23x44	AK-C-B34	28x84
AK-C-B3	43x66	AK-C-B35	27.5x66.2
AK-C-B4	24x64	AK-C-B36	47x132
AK-C-B5	27x66	AK-C-B37	25x58
AK-C-B6	28x58	AK-C-B38	22.4x61
AK-C-B7	25x40	AK-C-B39	30.5x72
AK-C-B8	20x54	AK-C-B40	27.5x81
AK-C-B9	44x80	AK-C-B41	26x108
AK-C-B10	19x52	AK-C-B42	40x93
AK-C-B11	22x104	AK-C-B43	45x240
AK-C-B12	38x63.5	AK-C-B44	30x80
AK-C-B13	33x70	AK-C-B45	42.7x65.8
AK-C-B14	32x23	AK-C-B46	33x61
AK-C-B15	29x75	AK-C-B47	45.2x70.8
AK-C-B16	25x82	AK-C-B48	30x79
AK-C-B17	35x65	AK-C-B49	24x58
AK-C-B18	39x80	AK-C-B50	35x90
AK-C-B19	29x67	AK-C-B51	20x65
AK-C-B20	27x142.5	AK-C-B52	22.5x43.5
AK-C-B21	28.8x82.8	AK-C-B53	48x100
AK-C-B22	45x122	AK-C-B54	30x55
AK-C-B23	32x82	AK-C-B55	40x50
AK-C-B24	40x157	AK-C-B56	56x75
AK-C-B25	32x138.5	AK-C-B57	23.5x64
AK-C-B26	25x66	AK-C-B58	42.5x68
AK-C-B27	24x70	AK-C-B59	23.5x101.2
AK-C-B28	19x45	AK-C-B60	33x79.2
AK-C-B29	22x55	AK-C-B61	45x60
AK-C-B30	25x64	AK-C-B62	35x70
AK-C-B31	29x46	AK-C-B63	46x66
AK-C-B32	47x88	AK-C-B64	28x122.3

Seperated style series

Size List:HxWxfree(mm)

Length can be random

AK-C-C1	40x97	AK-C-C32	26.5x76
AK-C-C2	25x98	AK-C-C33	38x91
AK-C-C3	32x82	AK-C-C34	74x90
AK-C-C4	26x26	AK-C-C35	59x90
AK-C-C5	50x205	AK-C-C36	83x120
AK-C-C6	36x76	AK-C-C37	33x96
AK-C-C7	20x50	AK-C-C38	103x120
AK-C-C8	38x52	AK-C-C39	70x120
AK-C-C9	46x76	AK-C-C40	50x91
AK-C-C10	63x120	AK-C-C41	44x90
AK-C-C11	33x11	AK-C-C42	49x120
AK-C-C12	55x106	AK-C-C43	57x76
AK-C-C13	38x88	AK-C-C44	35x120
AK-C-C14	30x105	AK-C-C45	64x136
AK-C-C15	26x71	AK-C-C46	44x100
AK-C-C16	25x40	AK-C-C47	60x82
AK-C-C17	45.5x96	AK-C-C48	25x25
AK-C-C18	45x122	AK-C-C49	88x167
AK-C-C19	45x152	AK-C-C50	50x178
AK-C-C20	47x107	AK-C-C51	61x115
AK-C-C21	51x125	AK-C-C52	101x155
AK-C-C22	54x145	AK-C-C53	81x135
AK-C-C23	54x168	AK-C-C54	122x175
AK-C-C24	82x145	AK-C-C55	55x95
AK-C-C25	68x145	AK-C-C56	22x65.2
AK-C-C26	56x96	AK-C-C57	38x61
AK-C-C27	90x90	AK-C-C58	49x61
AK-C-C28	50x110	AK-C-C59	68x65
AK-C-C29	30x88	AK-C-C60	45x61
AK-C-C30	29x90	AK-C-C61	15.2x67.3
AK-C-C31	48x91	AK-C-C62	26x78

SZOMK

Our packaging

Plastic foam packaging

Metal shell packaging

Plastic box packaging

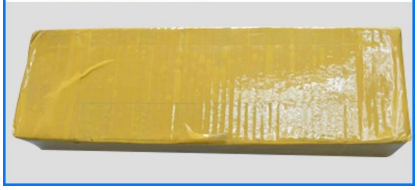

Email ric@szomk.net

skype szomk-008

Tel 86-755-83222882
+86-17097220635

Add 628Room,505 Building ,Shangbu industry, Hangtian road ,Futian district ,Shenzhen, China,518031

QQ 2038015319