Here is our customize service:

1. Change the length
2. Change color
3. Polishing
4. Sandblasting
5. Brushed aluminum foil
6. Cut hole
7. Laser carve
8. PVC label
9. Acrylic plate
10. Screen

Use:

It is widely used in electronics, instrumentation, automation, communication, power supply unites, student projects, amplifiers, healthcare equipment, test and measurement equipment, industrial control, peripherals devices and interfaces, switch boxes.

Attention:

Welcome to contact us for more details and quotations of our enclosure, your inquiry will surely get prompt response in 24 hours. :-)

SZOMK

Customizable
Cutout,sticker
Silkscreen,color

Weight :80 g
Model No. AK-S-08

105*65*40 mm
Size:4.13*2.56*1.57 inch

SZOMK

SZOMK

SZOMK

SZOMK

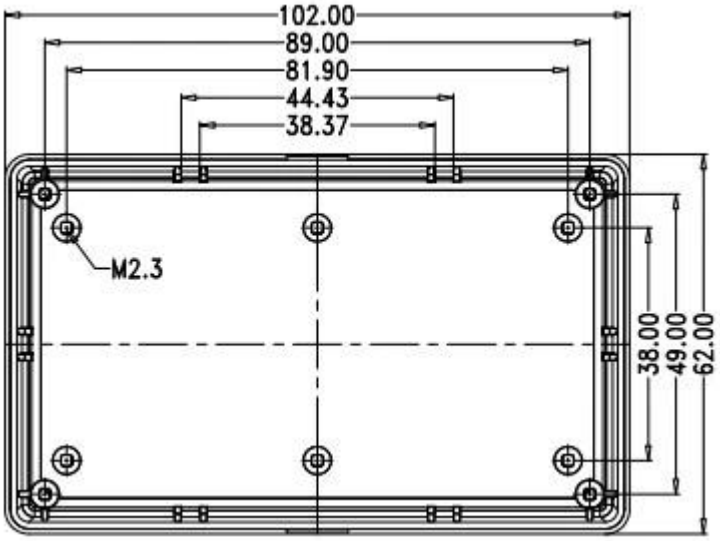
102.00
89.00
81.90
44.43
38.37
M2.3
38.00
49.00
62.00

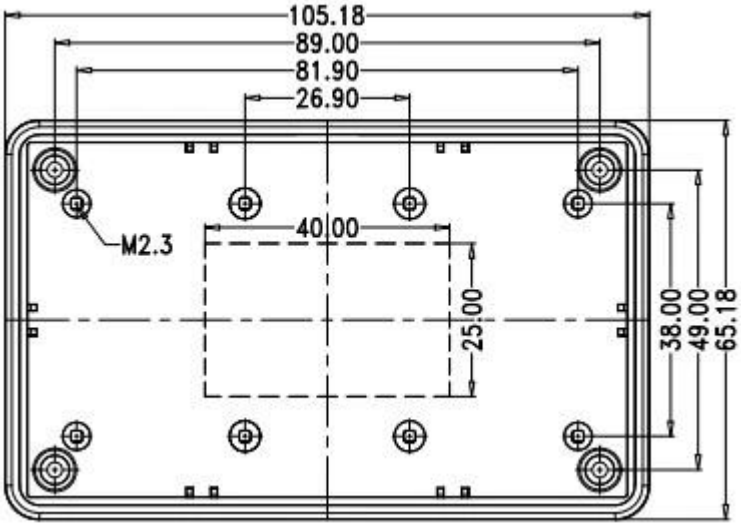
105.18
89.00
81.90
26.90
40.00
M2.3
25.00
38.00
49.00
65.18

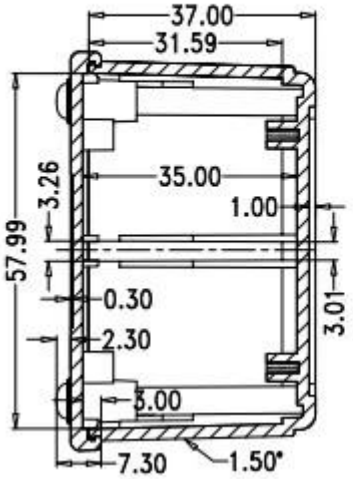
37.00
31.59
35.00
1.00
3.26
57.99
0.30
2.30
3.01
3.00
7.30
1.50°

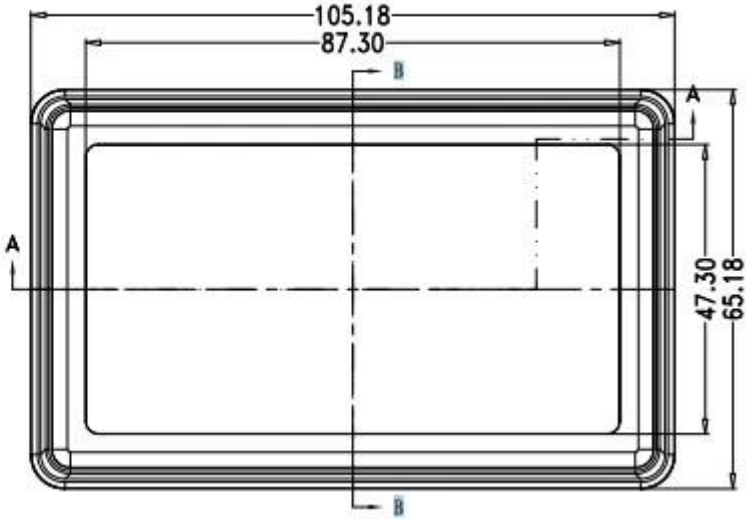
105.18
87.30
B
A
A
47.30
65.18
B

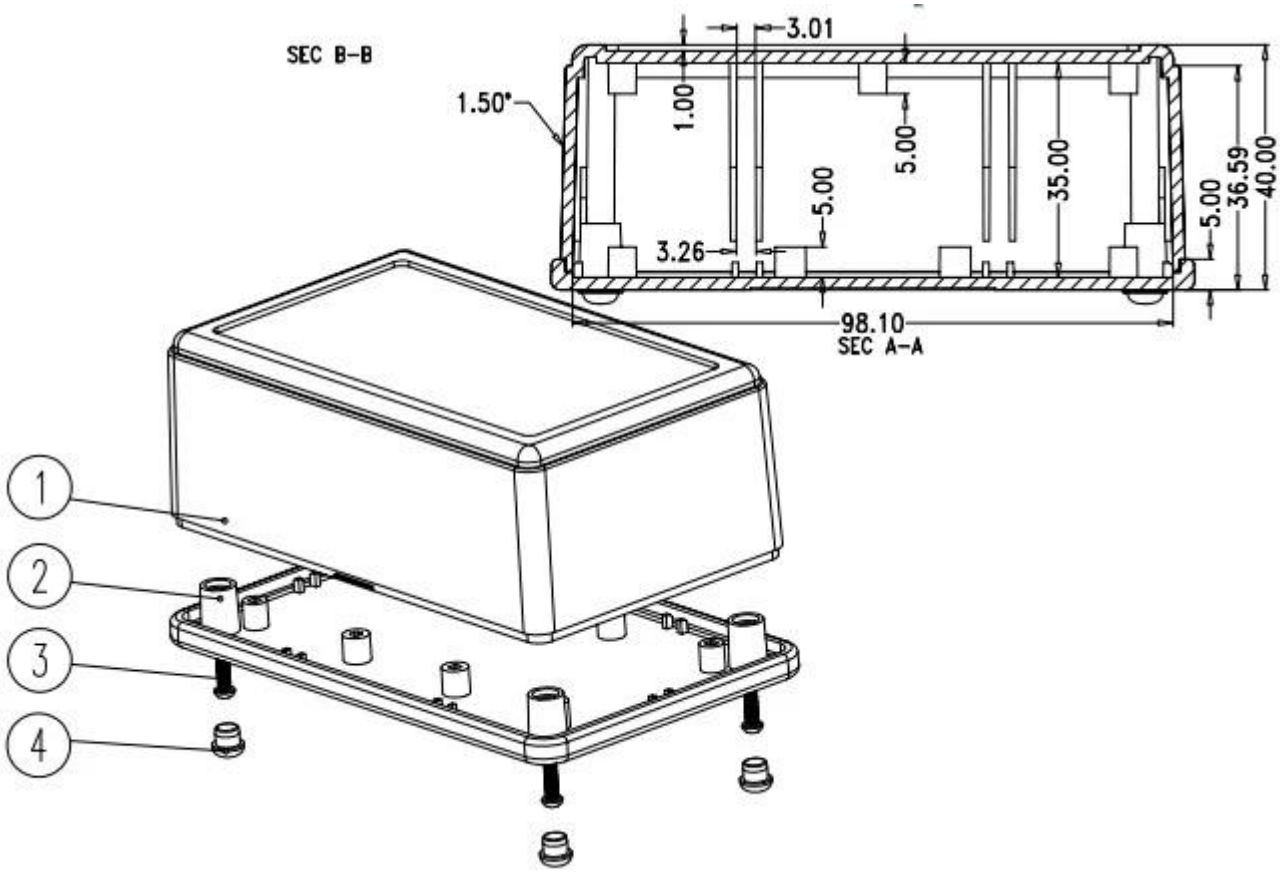
SEC B-B
3.01
1.50°
1.00
5.00
5.00
35.00
36.59
40.00
5.00
3.26
98.10
SEC A-A
1
2
3
4

QQ 505924585

Tel 86-755-83222882
86-13028816914

Add 628Room,505 Building ,Shangbu industry, Hangtian road ,Futian district ,Shenzhen, China,518031

Email lily@szomk.net

skype szomk006