[illegible]:

1. [illegible]
2. [illegible]
3. [illegible]
4. [illegible]
5. [illegible]
6. [illegible]
[illegible] .7 [illegible]
8. [illegible] PVC
9. [illegible]
10. [illegible]

[illegible]:

[illegible]

[illegible]:

[illegible] [illegible] [illegible] [

SZOMK

Customizable
Cutout,sticker
Silkscreen,color

Weight :189 g
Model No. AK-H-36

Size:6.73*3.86*1.22 inch
171*98*31 mm

SZOMK

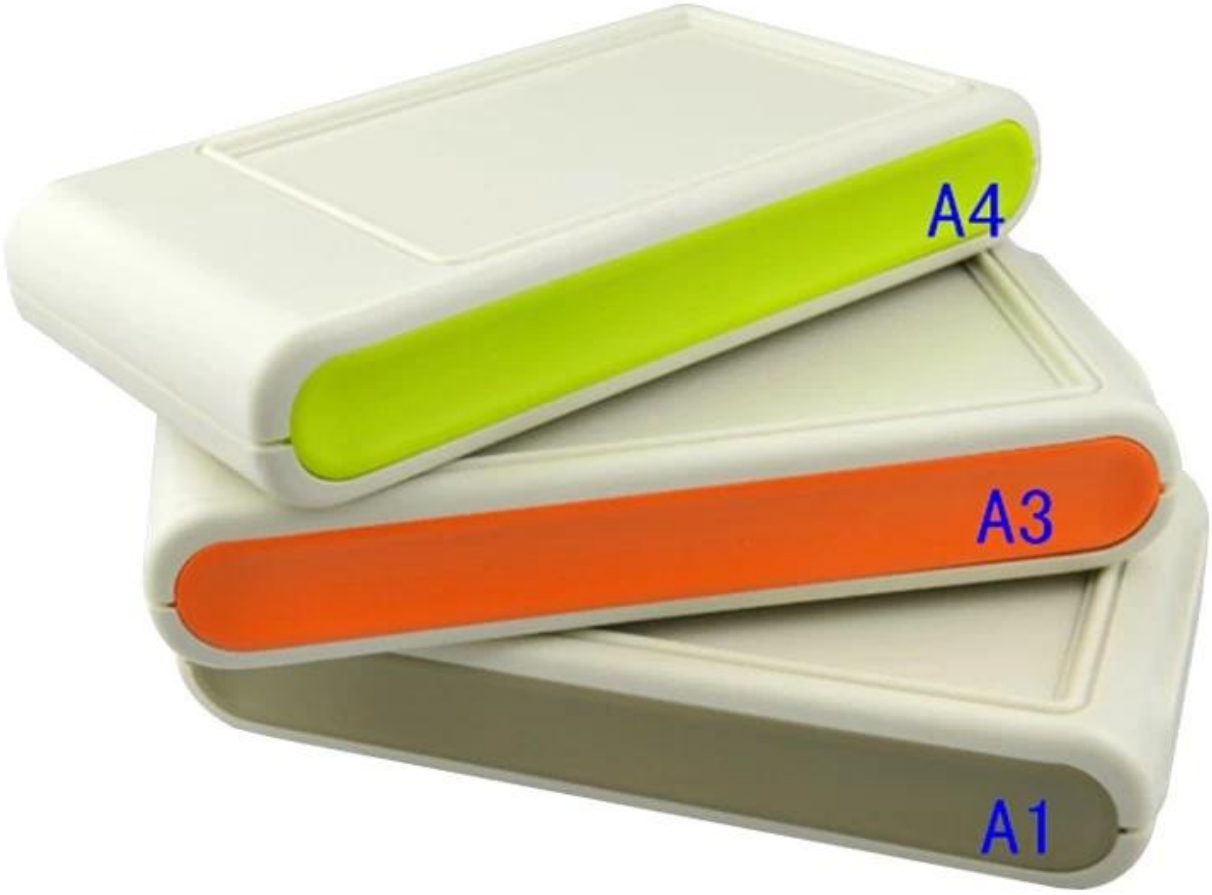

SZOMK

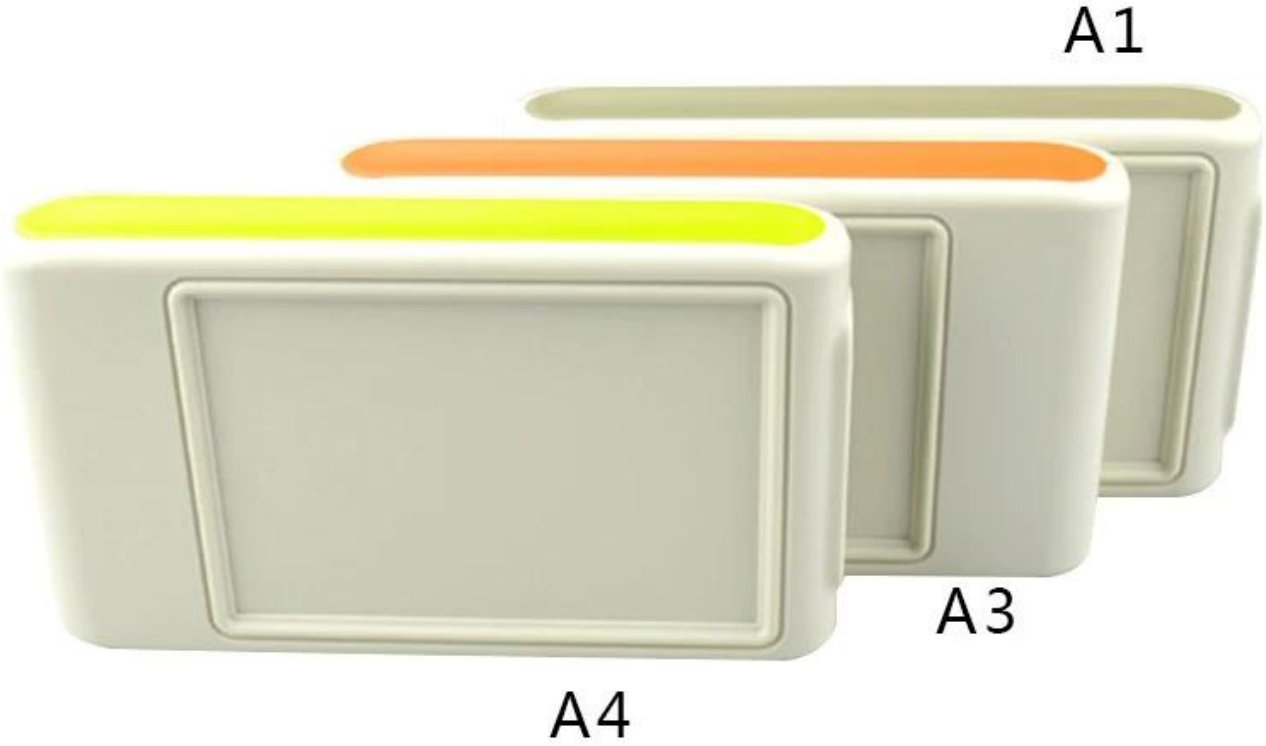

SZOMK

SZOMK

SZOMK

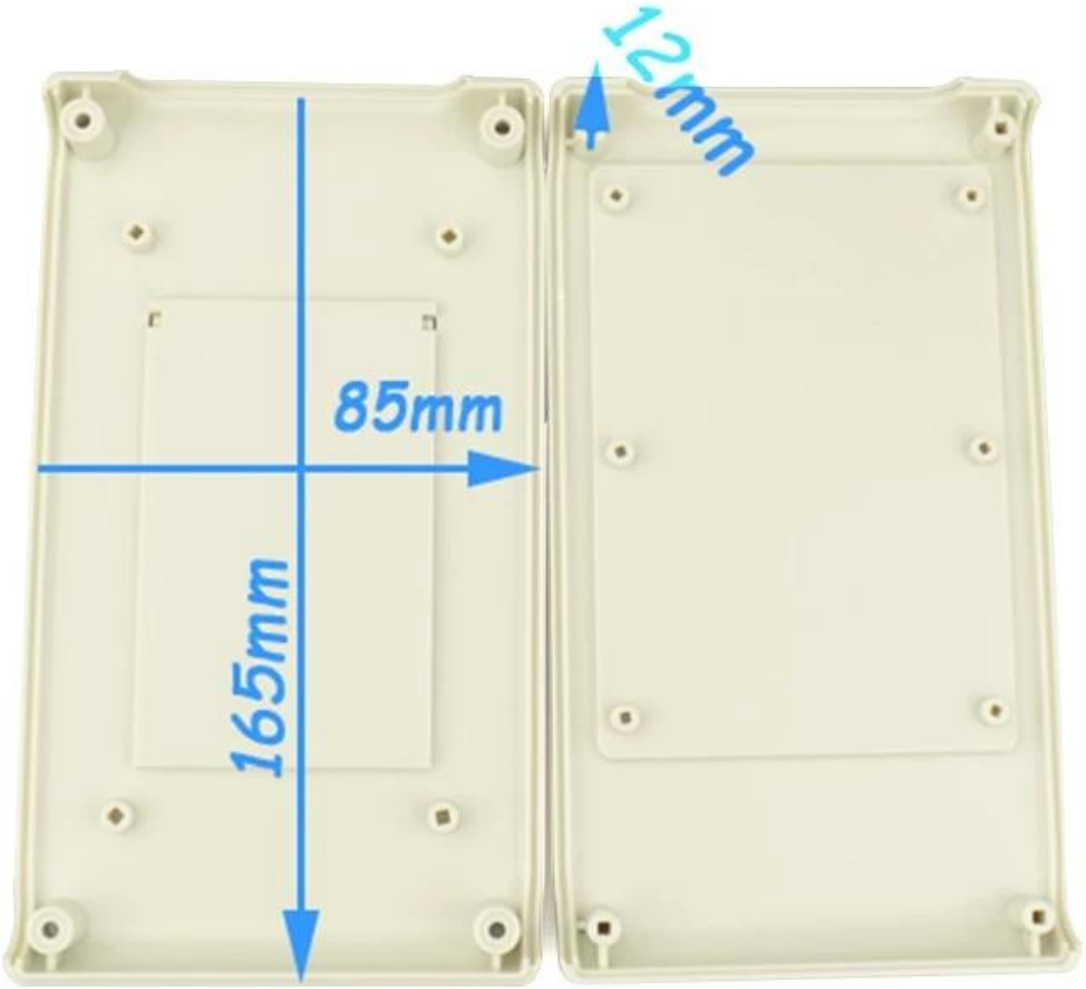

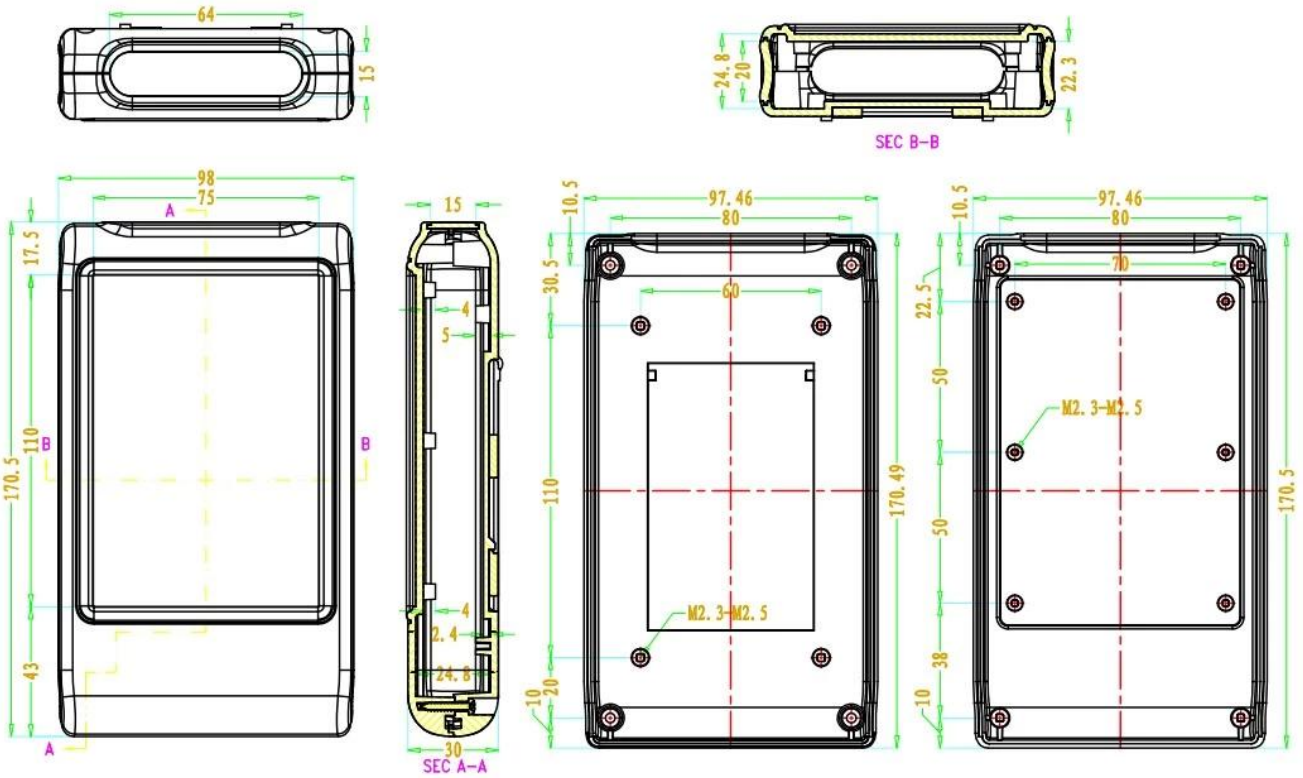
64
15
24.8
20
22.3
SEC B-B
98
75
A
17.5
110
B
170.5
43
A
15
4
5
4
2.4
24.8
30
SEC A-A
10.5
97.46
80
30.5
60
110
170.49
M2.3-M2.5
10
20
10.5
97.46
80
70
22.5
50
M2.3-M2.5
50
38
10
170.5

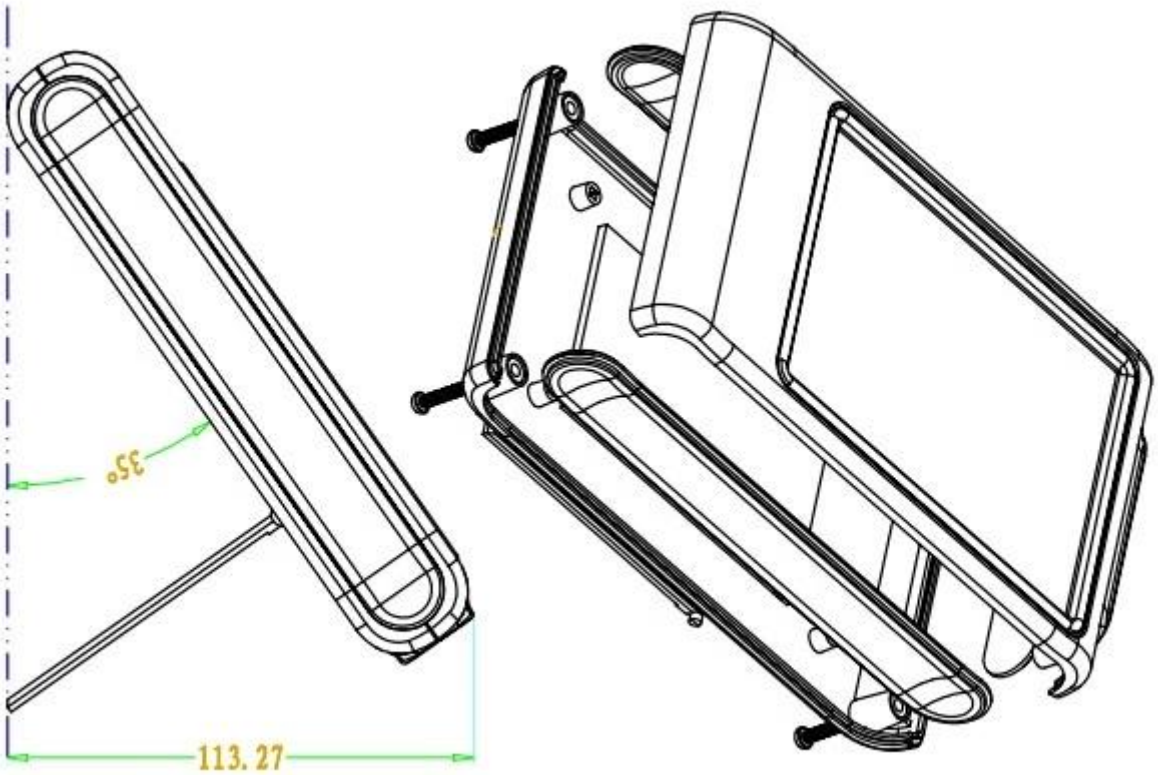
35°
113.27

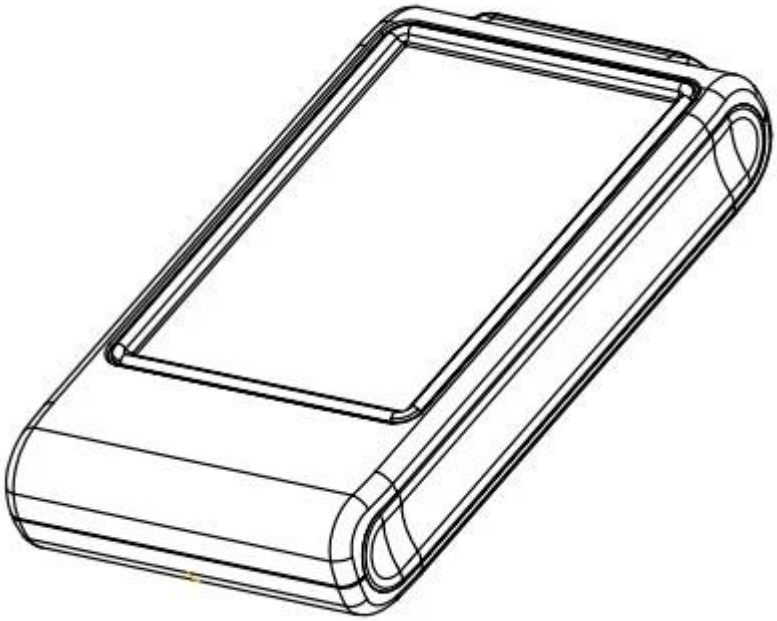

QQ 505924585

Tel 86-755-83222882
86-13028816914

Add 628Room,505 Building ,Shangbu industry, Hangtian road ,Futian district ,Shenzhen, China,518031

Email lily@szomk.net

skype szomk006