□□□□□ □□□□□ SZOMK
1. .□□□□□□ □□□□□□□ □ □□□□□□ □□□□□□□ □ □□□□□□ □□□□ □□□□□□ □□□□□
.□□ □□□□□□ □□□□□□□□□□ □□□□□□ □□□□□□ □□□□□ □ □□□□□□□ □□ □□□□□□ □□□□□□ □□ □□□□□ □□□□□ □□□□ .2
.□□ □□□□□□ □□□□□□□□□□□□ □□□ □□□□ □□□□ □□□□□ □□□□ .3

□□ □□□□ □□ □□□□□□ □□□□
.□□□□□ □□□ □□□□□□□□ □□ □□ □□□□□□ .□□□ □□□□ □□□□□□ □□□□□ 1
□□□□ □ □□□□□ □ □□□□□□□□ □ □□□□□□□ □□□□□ □ □□□□□□□□ □□□□□□ □ □□□□□ □ □□□□ □ □□□□□□ □□□□□ 2
.□□□□□□□□□ □□□□□□□
(□□□□□ □□□□) □□□□□ □□□ □□□□ 5-3 □□□ □□□□ □ □□□□□□□ □□□□□□□ □□□ 3
□□□□□□□□□ □□□□□ 4

تحديد المنتج

SZOMK

Customizable
cutout, sticker
silkscreen, color

Weight: 41g
Model No.AK-S-09

Size: 3.35*2.17*1.38 inch
85*55*35 mm

SZOMK

SZOMK

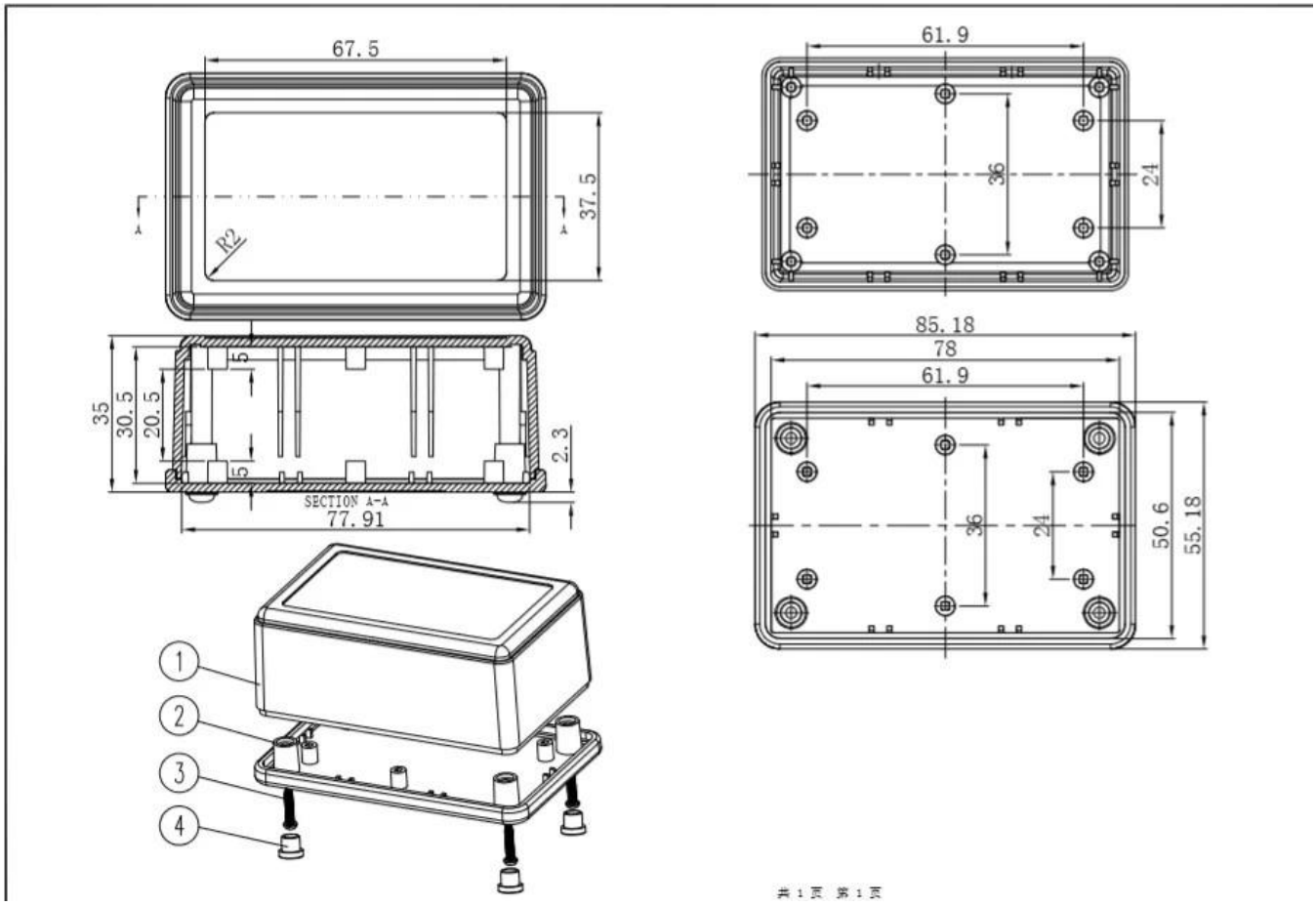
67.5
37.5
R2
A
A
35
30.5
20.5
5
5
2.3
SECTION A-A
77.91
1
2
3
4
61.9
36
24
85.18
78
61.9
36
24
50.6
55.18
共 1 页 第 1 页

خدمات مخصصة

Company Information

Shenzhen Futian Huaqiang Electronic World OMK Electronic Sales Departmen

This complex,during long years of efforts with it's own experienced group and sole facilities for improvement of productions and promotion of products quality, is now one of the largest suppliers of all kinds of metallic and plastic enclosures in different fields of electronic,electrical,communication,medical,industrial and research prtojects purposes.

In today's industrial world and with the rapid development of all industries,the need of these products is sensed more than ever.Therefore by offering the best quality and service,we try to meet these needs and help you to reach your ideals.

Factory and showroom

Exhibition

معلومات الاتصال

T/T, WESTERN UNION, MONEY GRAM AND PAYPAL ACCPETED.

Welcome to inquire!

Contact Us

Tel: 86-755-8322 2882

Email: **devin@szomk.net**