It is widely used in electronic, instrumentation, automation, communications, power supply units, student projects, amplifiers, Medical and wellness devices, test and measurement equipment, industrial control, peripheral devices and interfaces, switch boxes.
GSM Smart Building
Height 45mm
77mm
220mm

□□□□□□□□□□□□□□□

1.□□□□□□□□□□□□□□□□□□□□□□
2.□□□□□□□□□□□□□□□□□□□□□□□□□□□□□□
3.□□□□□□□□□□□□□□□□□□□□□□□□□□□□□

□□□□□□□□□

1□□□□□□□□□□□□□□□□□□□□
2□□□□□□□□□□□□□□□□□□□

SZOMK

Enclosure Manufacturer

www.chinaenclosure.com

SZOMK

Customizable
cutout, sticker
silkscreen, color

Weight: 96g

Size: 6.30*3.94*1.18 inch
160*100*30 mm

Model No.AK-NW-06

SZOMK

SZOMK

SZOMK

SZOMK

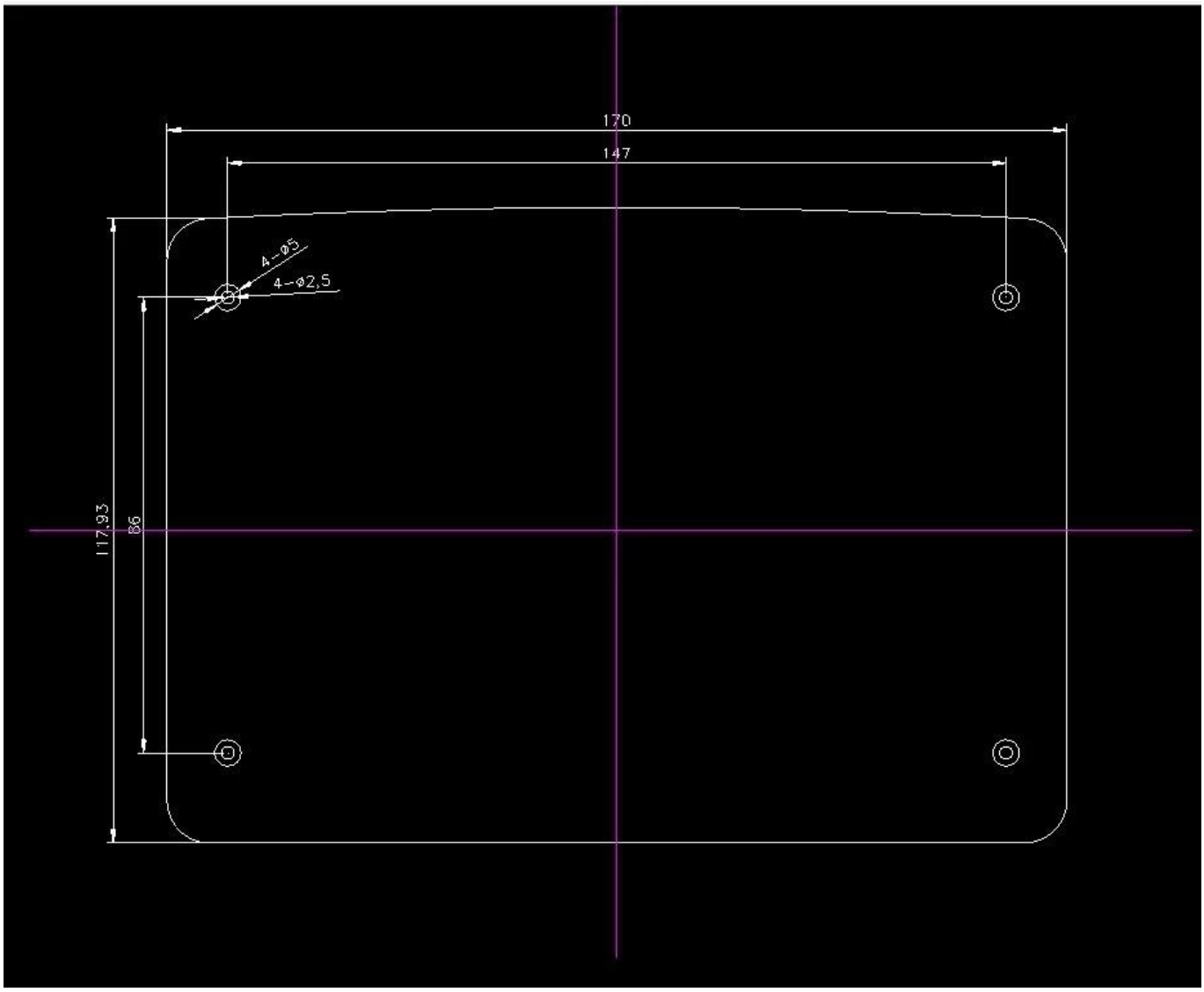
170
147
4-Ø5
4-Ø2,5
117,93
86

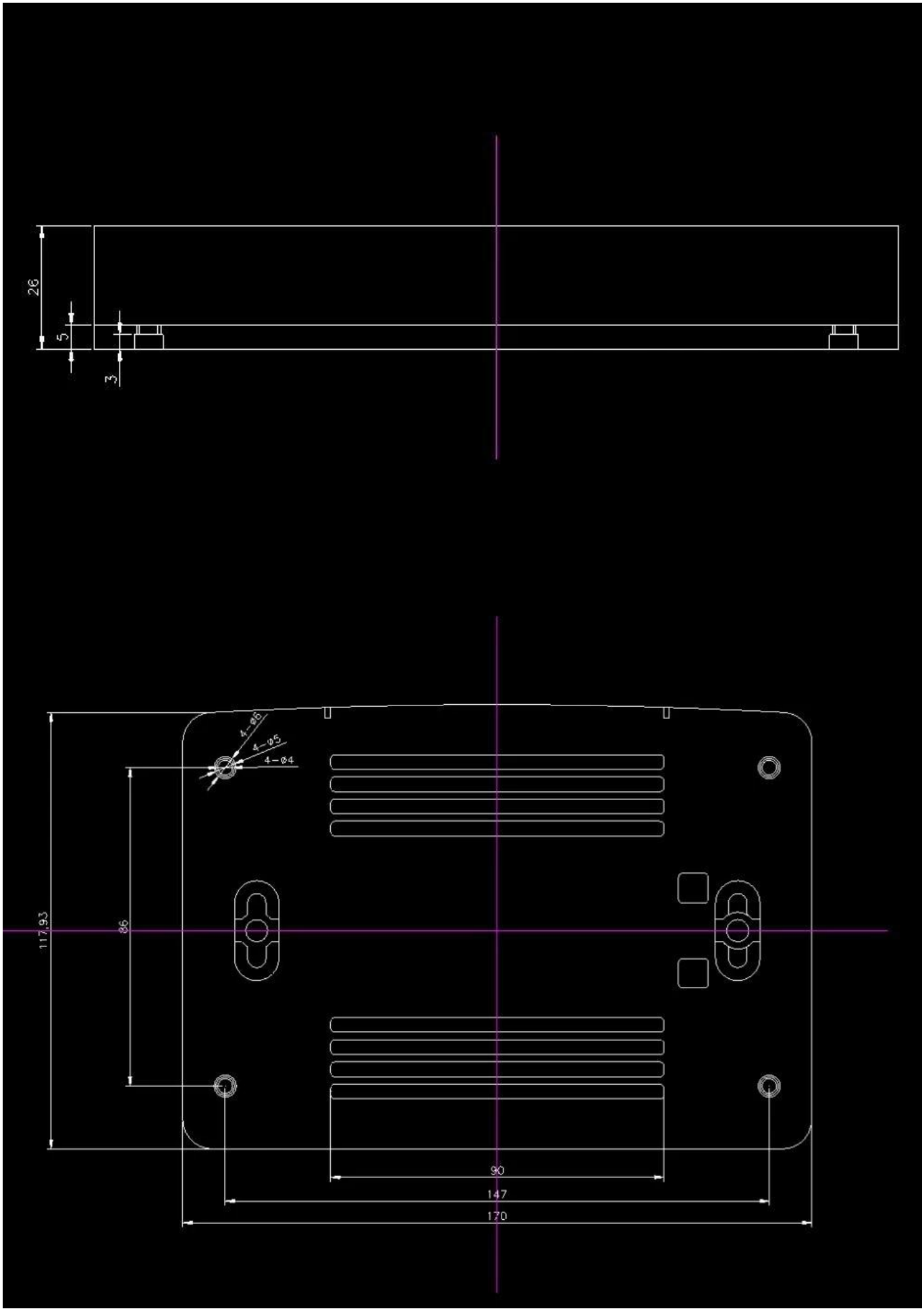
26
5
3
4-Ø6
4-Ø5
4-Ø4
117,93
86
90
147
170

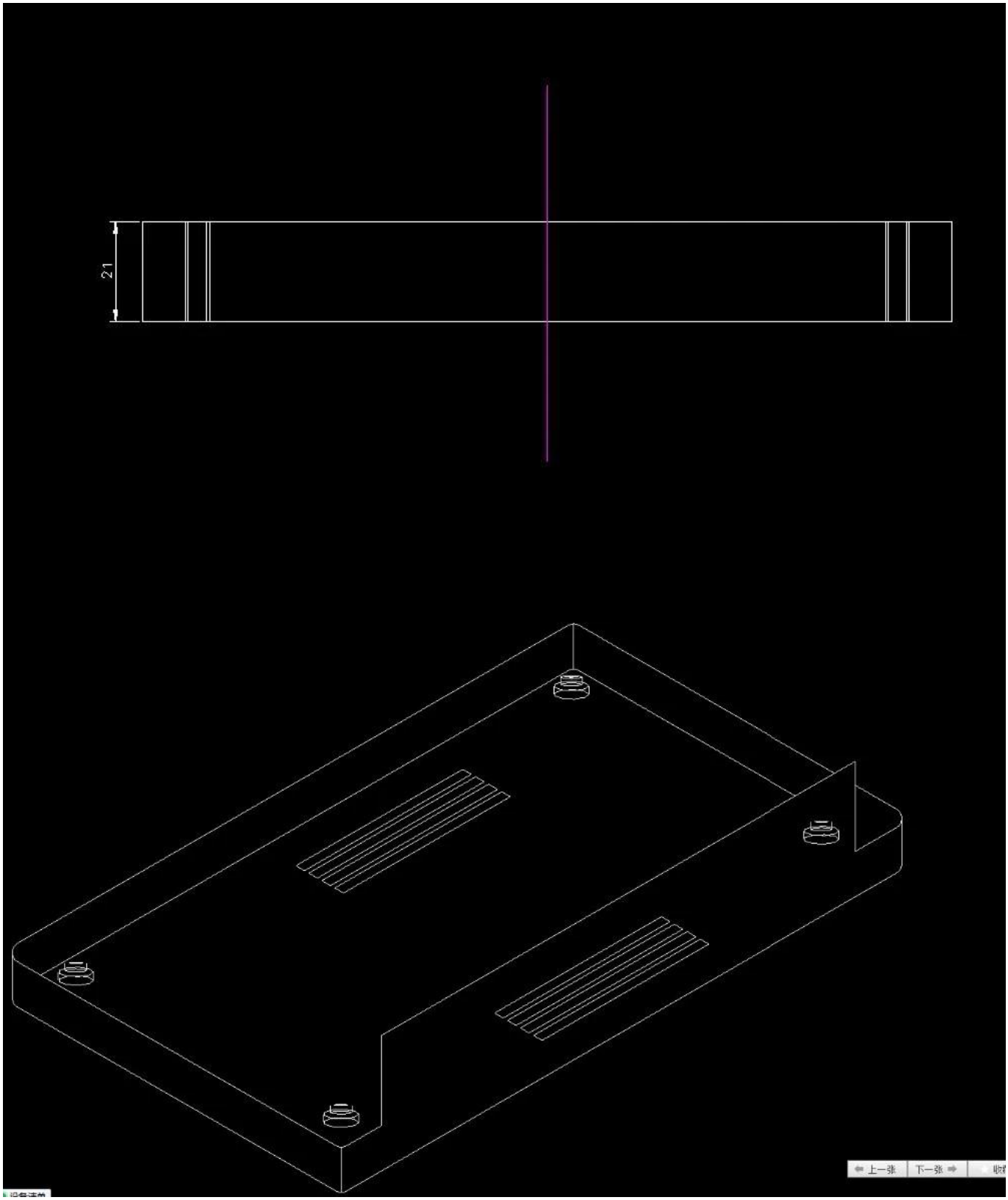
21
上一张
下一张

□□□□

SZOMK
WE CAN DO
Provide thousands of public enclosure
MOQ: 1 piece
Small order custom MOQ: 20-30 pcs
Design private custom enclosure (provide PCB)
Molding、tooling (provide sample / STEP file)
cutout, laser engrave, screen printing, sticker, acrylic plate, pvc label, color, silica gel rings, etc.

WE CAN DO
For HOUSING some of the Processing,
Openings、Screen、Stickers、PVC LABLE

□□□□□□□□

SZOMK

Our packaging

Plastic foam packaging

Metal shell packaging

Plastic box packaging

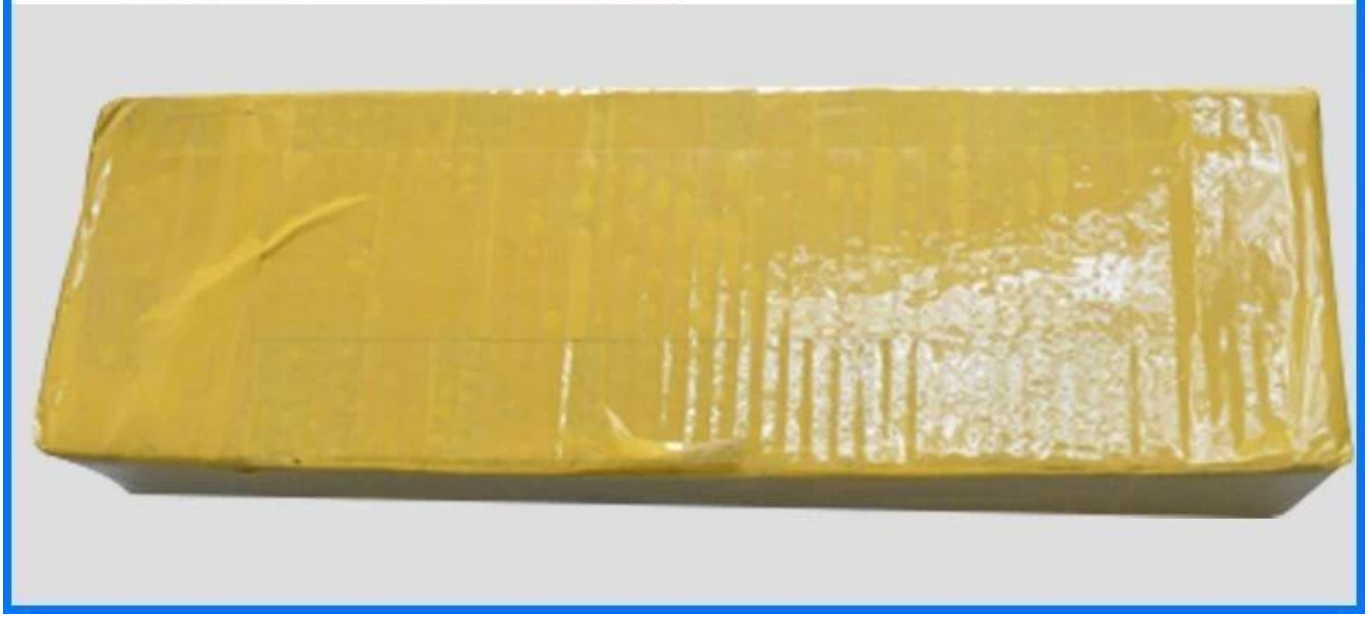

□□□□
□□□□□william@szomk.net
Skype□□szomk-002
QQ□2033950667