SZOMK OEM□□□□□□□□□□□□PCB□□AK-W-17 200X145X64mm

□□□

1□□□□□□□□□□□□□
2□□□□□□□□□□□□□□□□□□□□□□□□□
3□□□□□□□□□□□□□□
4□□□□□□□□
5□□□□□□□□
6□□□□□□□□□□□□□

□□□□□

□□□

SZOMK

Enclosure Manufacturer

www.chinaenclosure.com

SZOMK

SZOMK

SZOMK

SZOMK

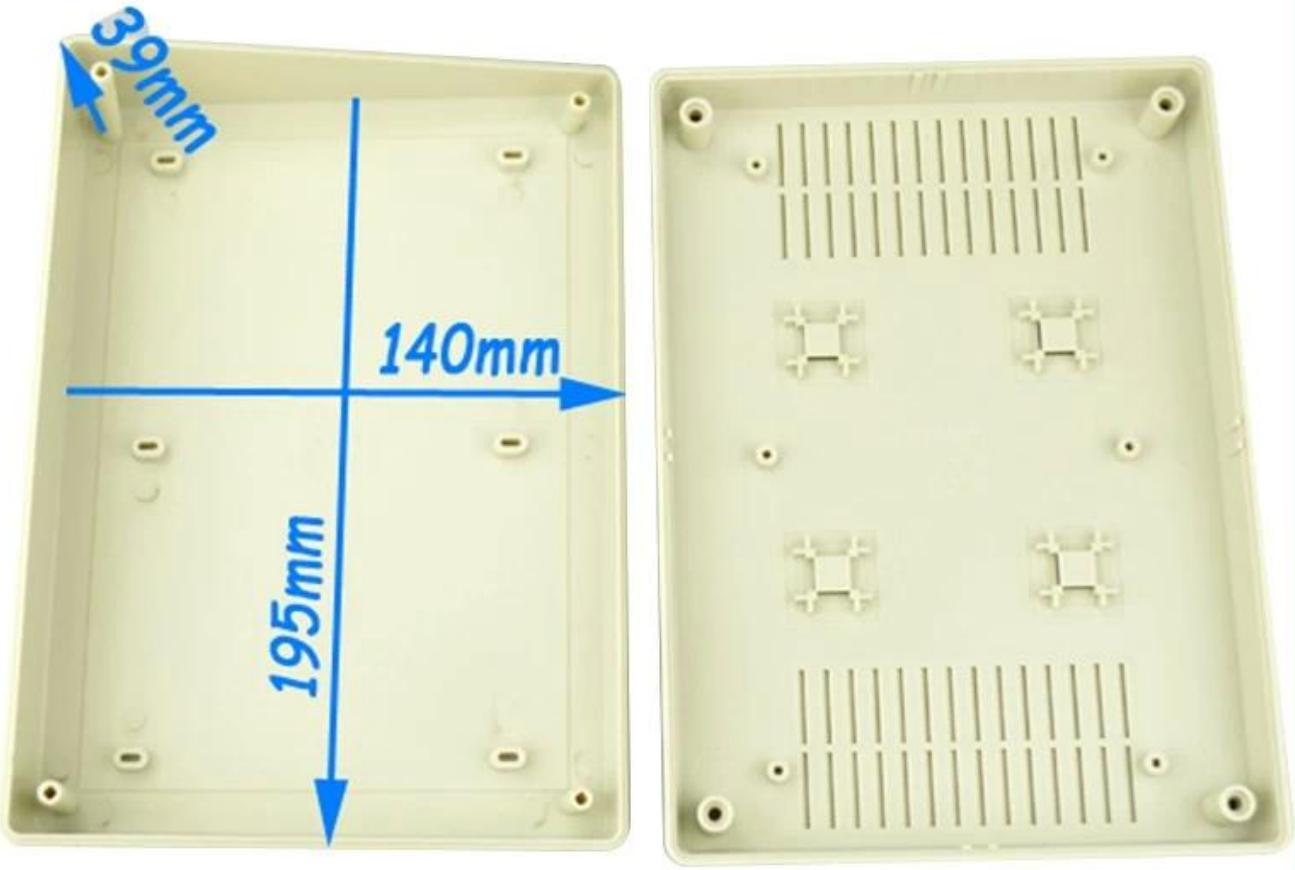

szomk.004@gmail.com

BMW 50002

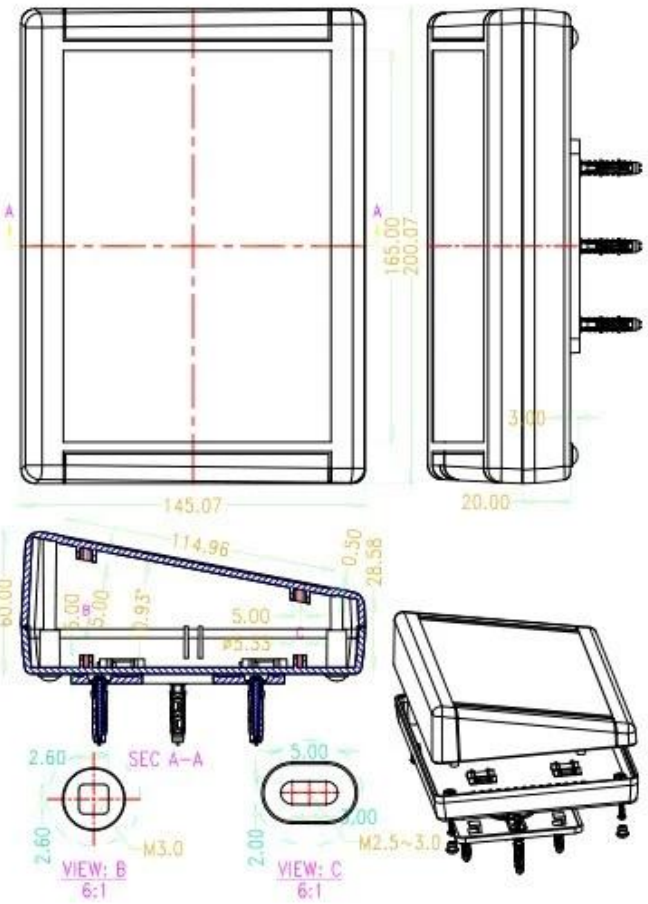

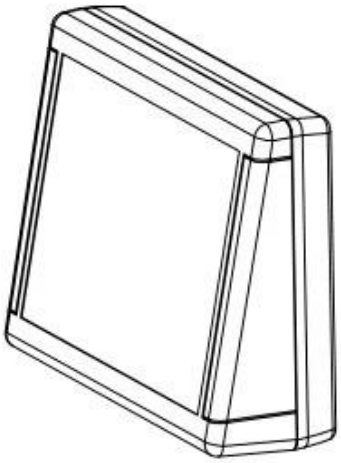

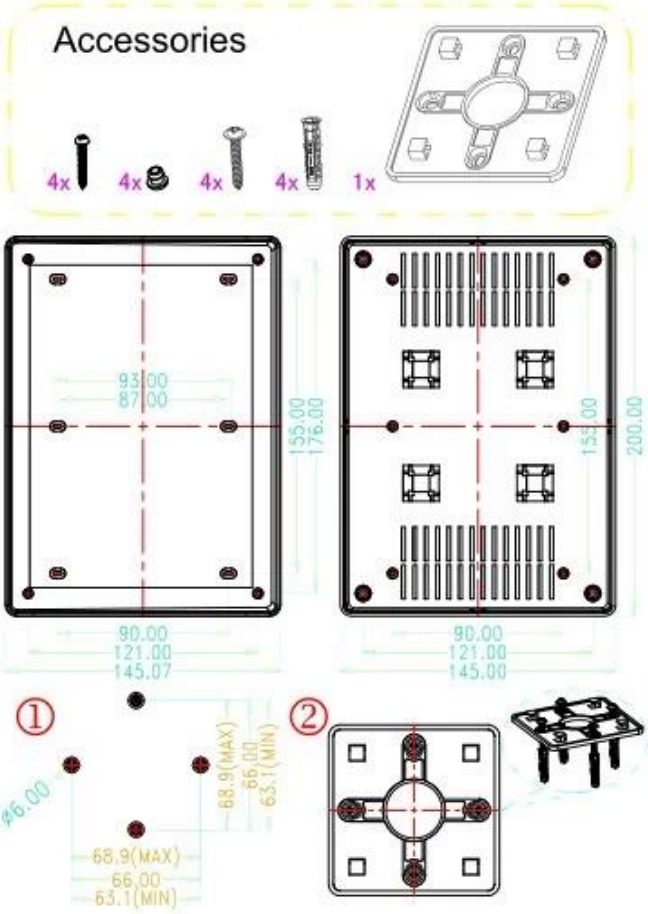

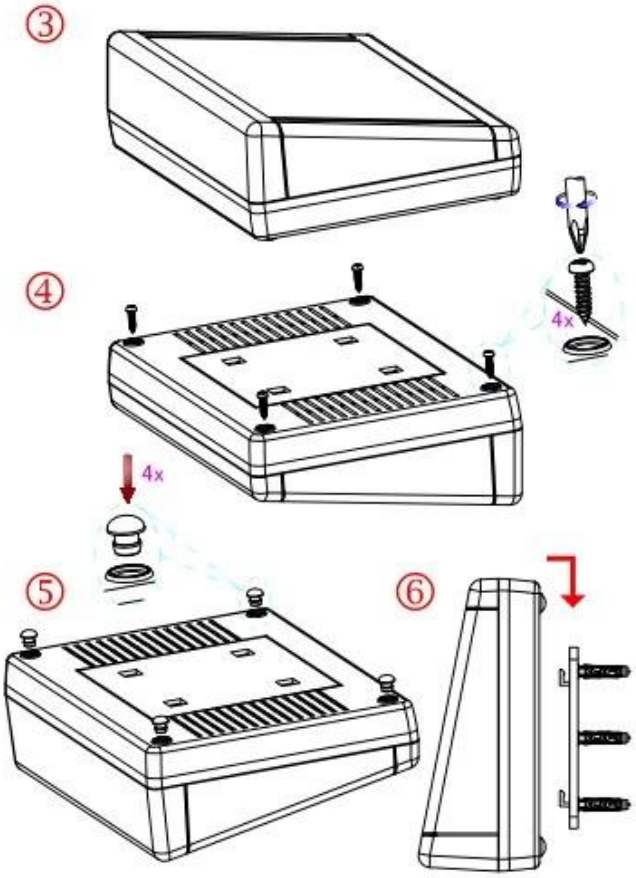

T/T, WESTERN UNION, MONEY GRAM AND PAYPAL ACCPETED.

Skype: 13691908477

Tel: 86-13691908477

Email: felix@chinaenclosure.com

Contact Us