SZOMK OEM□□□□□□□□□□□□□□□□□□PCB□□AK-W-17 200X145X64mm

□□□

1□□□□□□□□□□□□□□
2□□□□□□□□□□□□□□□□□□□□□□□□□□□□
3□□□□□□□□□□□□□□□
4□□□□□□□□□
5□□□□□□□□□
6□□□□□□□□□□□□□□□

□□□□□

□□□□□□□□□□□□□□□□□□□

SZOMK

Enclosure Manufacturer

www.chinaenclosure.com

SZOMK

SZOMK

SZOMK

SZOMK

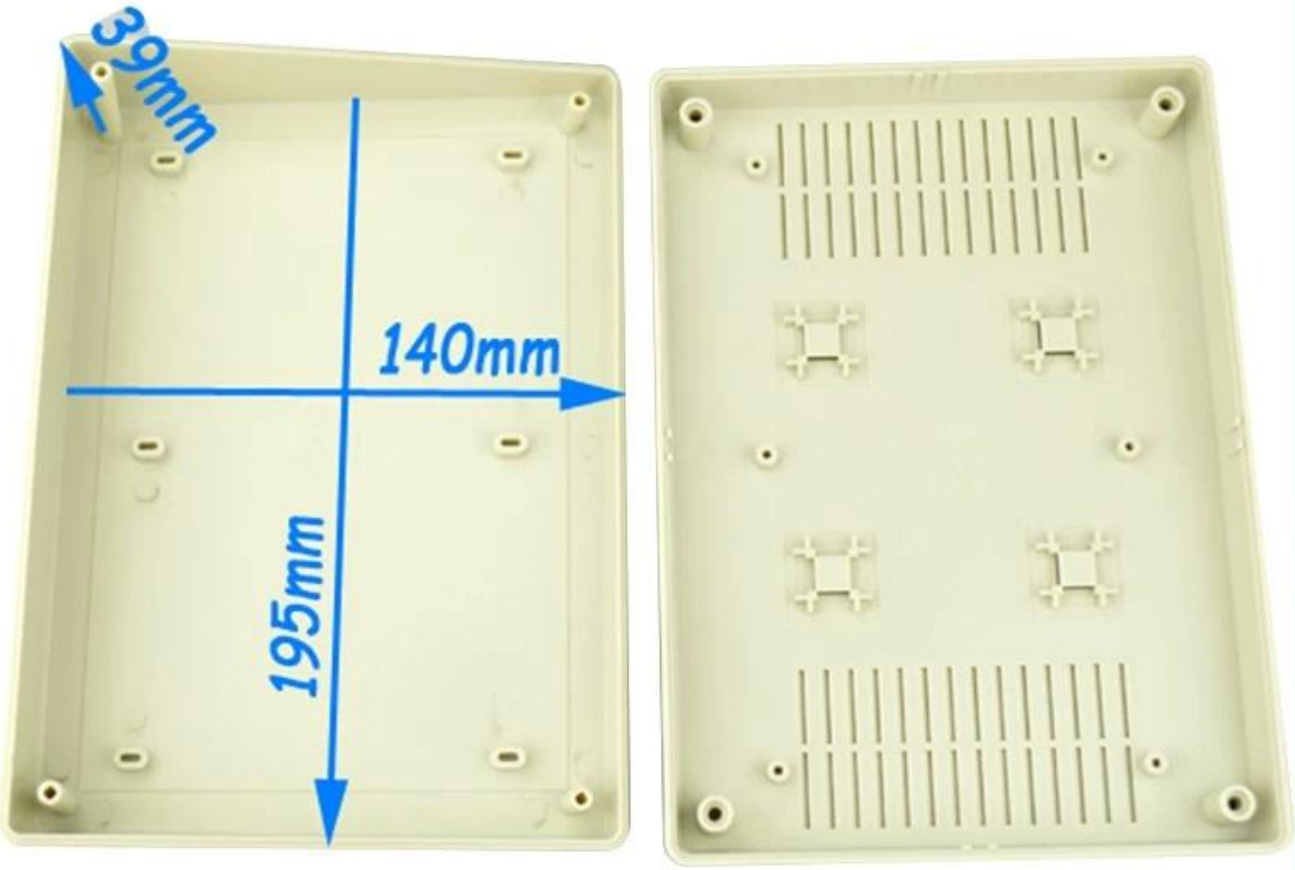

szomk.004@gmail.com

BMW 50002

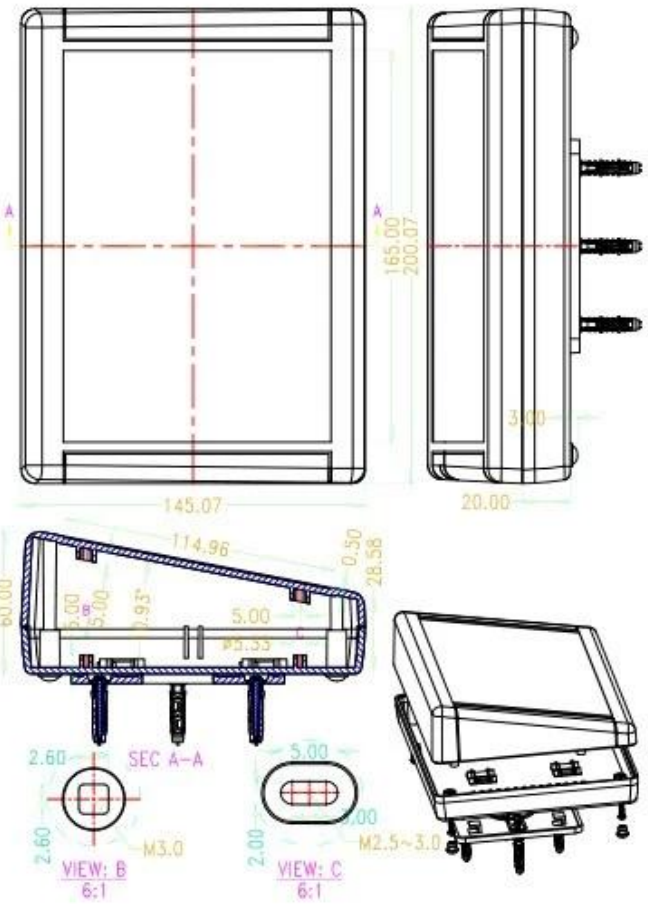

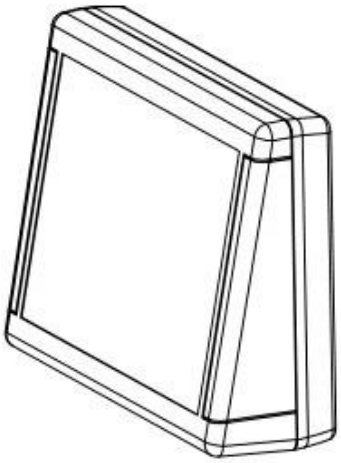

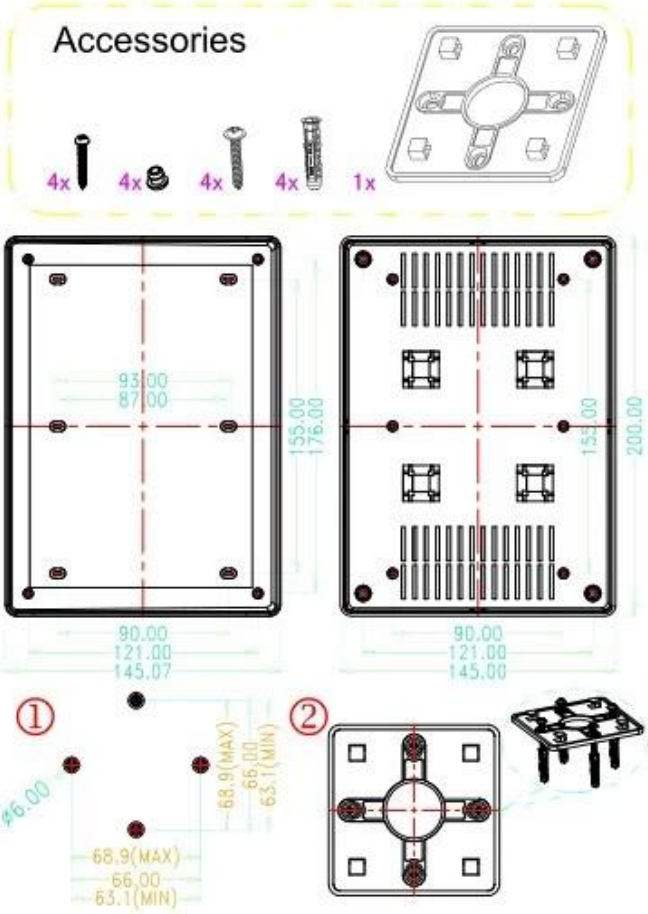

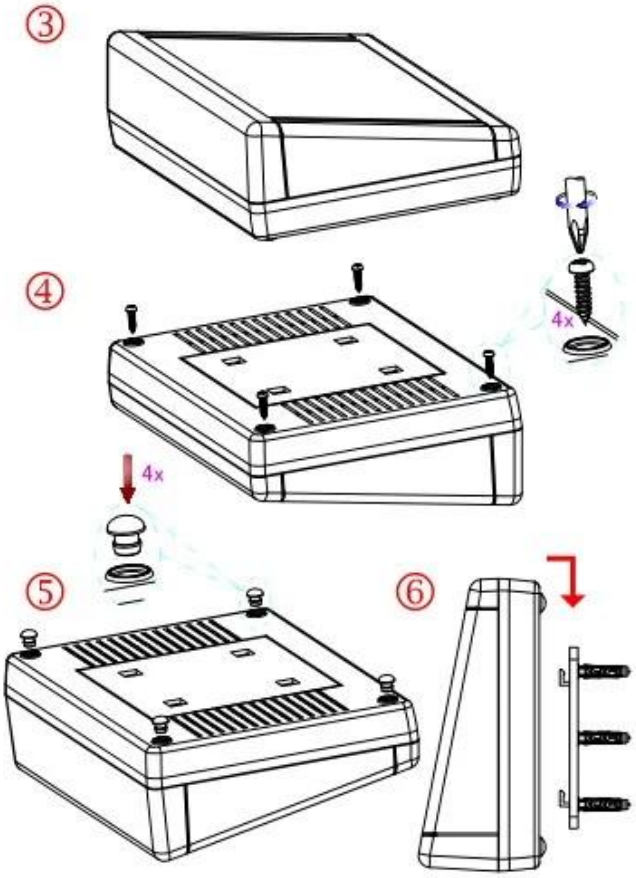

T/T, WESTERN UNION, MONEY GRAM AND PAYPAL ACCPETED.

Skype: 13691908477

Tel: 86-13691908477

Email: felix@chinaenclosure.com

Contact Us