[illegible]

1[illegible]
2[illegible]
3[illegible]3-5[illegible]
4[illegible]

[illegible]

[illegible]

[illegible]

[illegible]24[illegible]

[illegible]

SZOMK

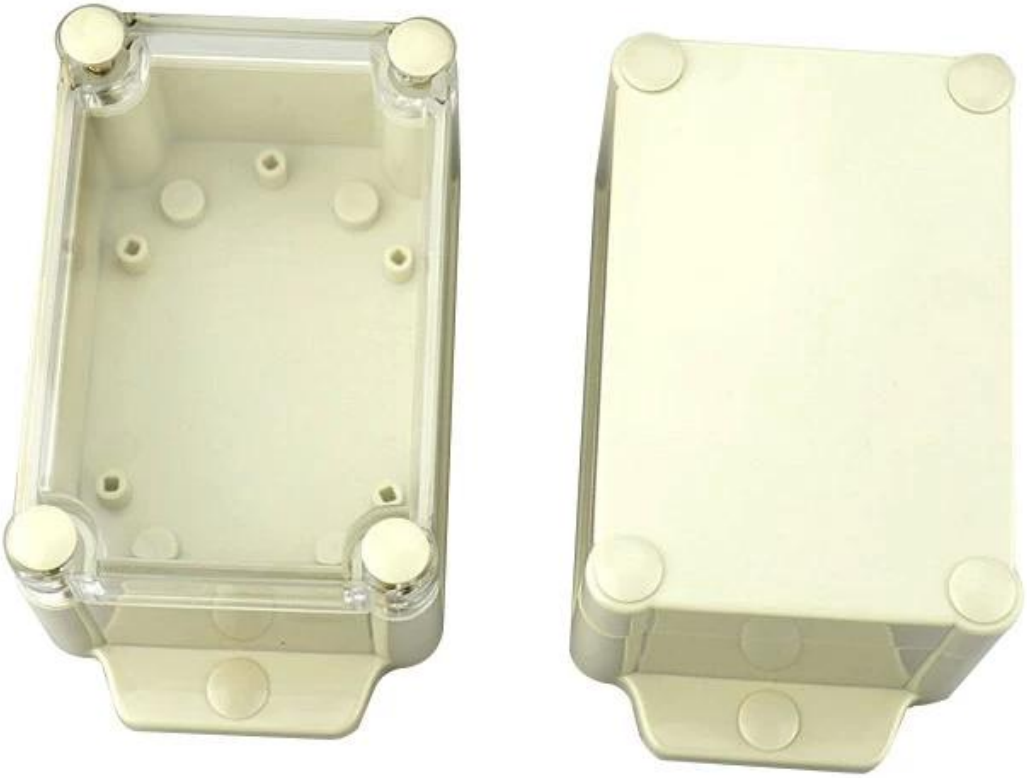

SZOMK

SZOMK

SZOMK

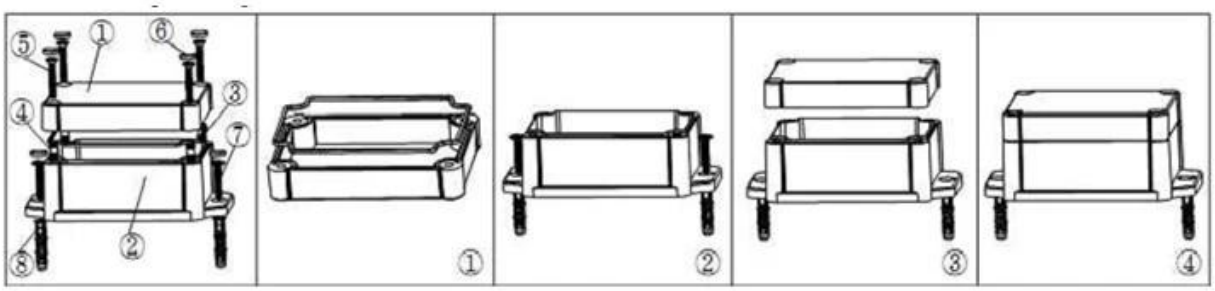

①

Epitheca (1PCS)
Material:ABS
Color:Light Grey(FS20412)

②

Hypotheca (1PCS)
Material:ABS
Color:Light Grey(FS20412)

Gasket (1PCS)
Material:Rubber

Copper Nut(6PCS)
Material:Copper
Standard:M4*10
Color:Copper

Grub Screw(6PCS)
Material:Stainless Steel
Standard:M4*25

Screw Lid(6PCS)
Material:ABS
Color:Light Grey(FS20412)

Self-Tapping Screw(4PCS)
Material:Iron
Standard:M4*30

Wall Nail(4PCS)
Material:PP
Color:Light Grey(CM906)

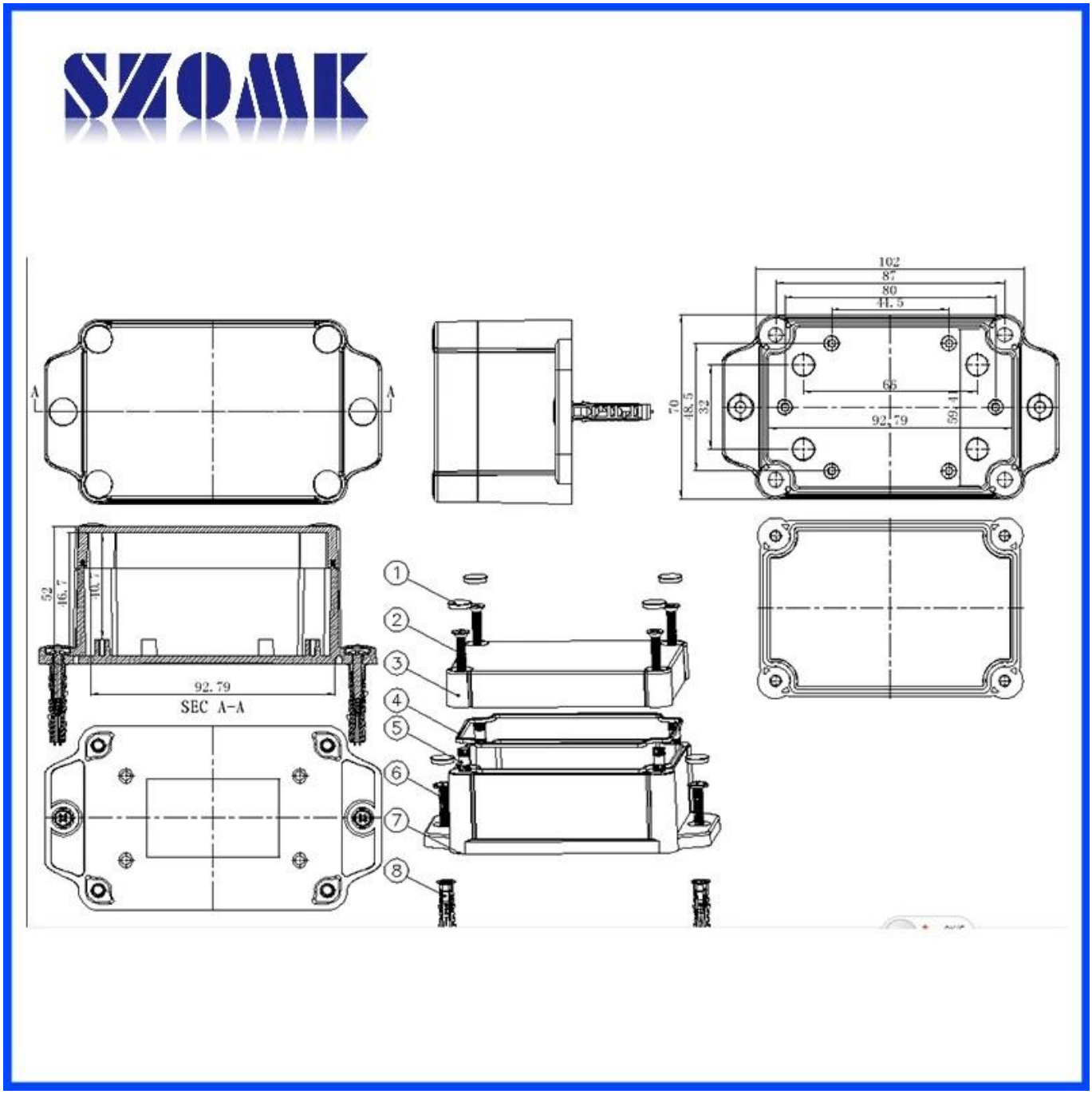
SZOMK
102
87
80
41.5
65
92.79
59.41
70
48.5
32
A
A
52
46.7
10.7
92.79
SEC A-A
1
2
3
4
5
6
7
8

□□ □□

T/T, WESTERN UNION, MONEY GRAM AND PAYPAL ACCPETED.

Skype: 86-13392896082

Tel: 86-13392896082

Email: kevin@chinaenclosure.com

Contact Us