[illegible]

1.[illegible]
2.[illegible]
3.[illegible]
4.[illegible]
5.[illegible]
6.[illegible]
7.[illegible]
8. PVC[illegible]
9.[illegible]
10.[illegible]

[illegible]

[illegible]

[illegible]

[illegible]24[illegible] [illegible]-[illegible]

SZOMK

Customizable
Cutout,sticker
Silkscreen,color

Weight :67 g Size :5.12*2.87*0.91 inch
Model No.AK-H-51 130*73*23 mm

SZOMK

SZOMK

SZOMK

SZOMK

SZOMK

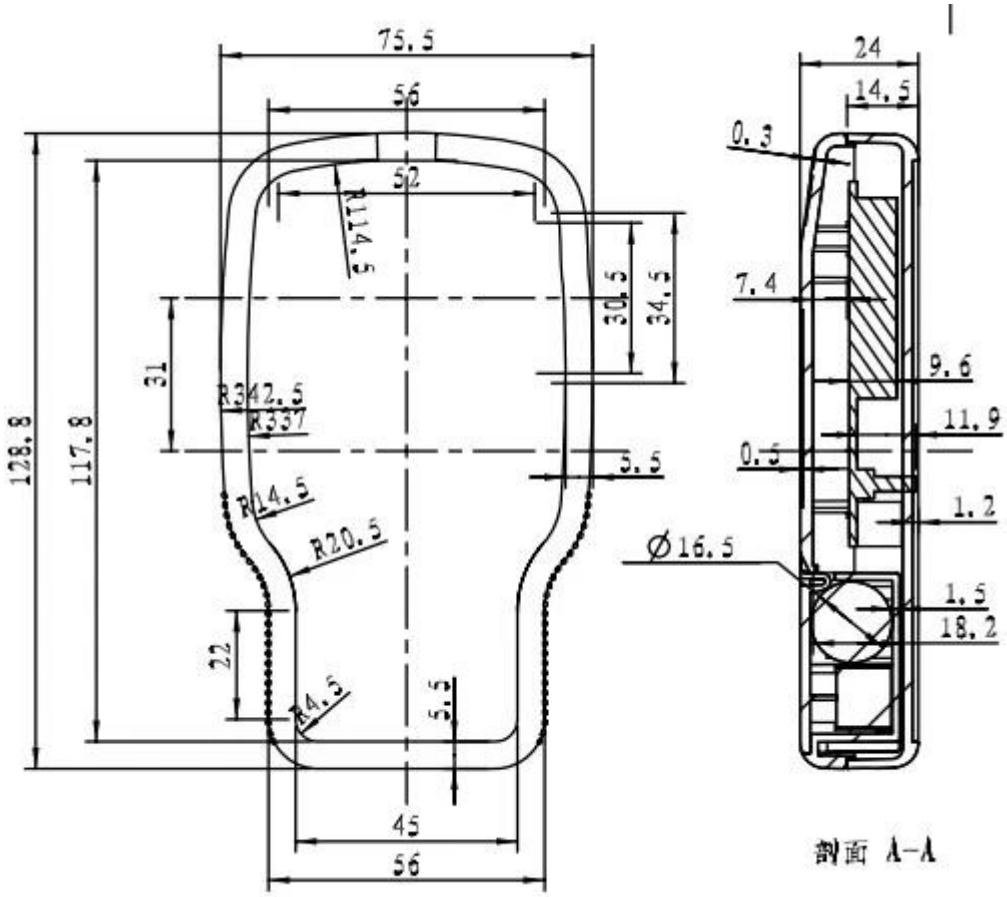
75.5
56
52
R114.5
30.5
34.5
31
R342.5
R337
128.8
117.8
5.5
R14.5
R20.5
22
R4.5
5.5
45
56
24
14.5
0.3
7.4
9.6
11.9
0.5
1.2
Ø16.5
1.5
18.2
割面 A-A

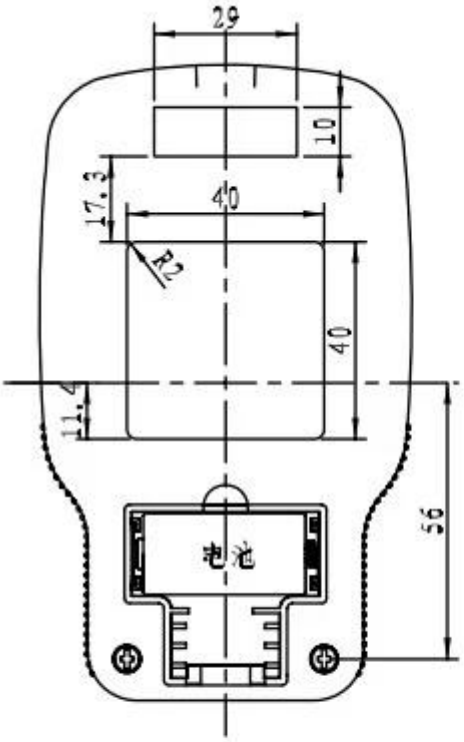

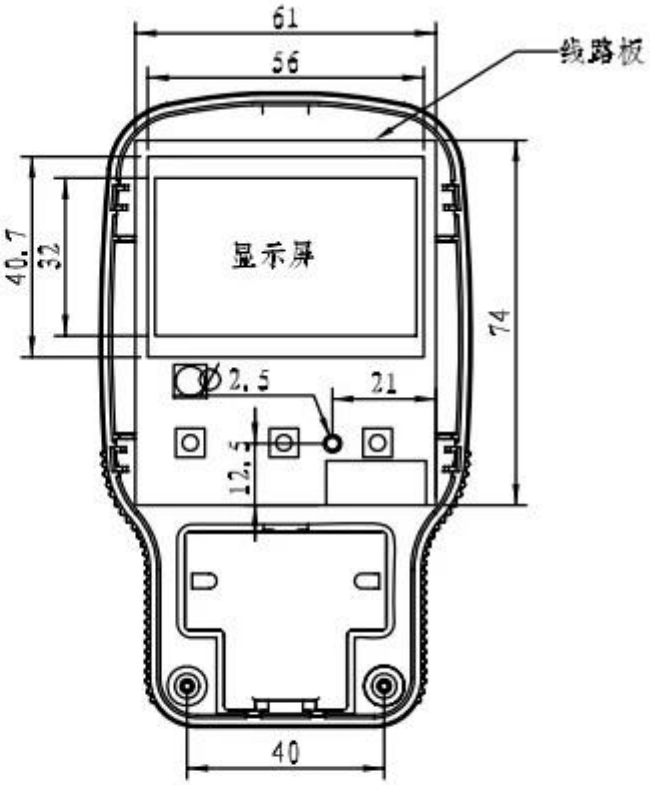

下盖正视图

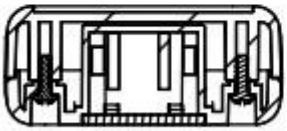

剖面 2-2

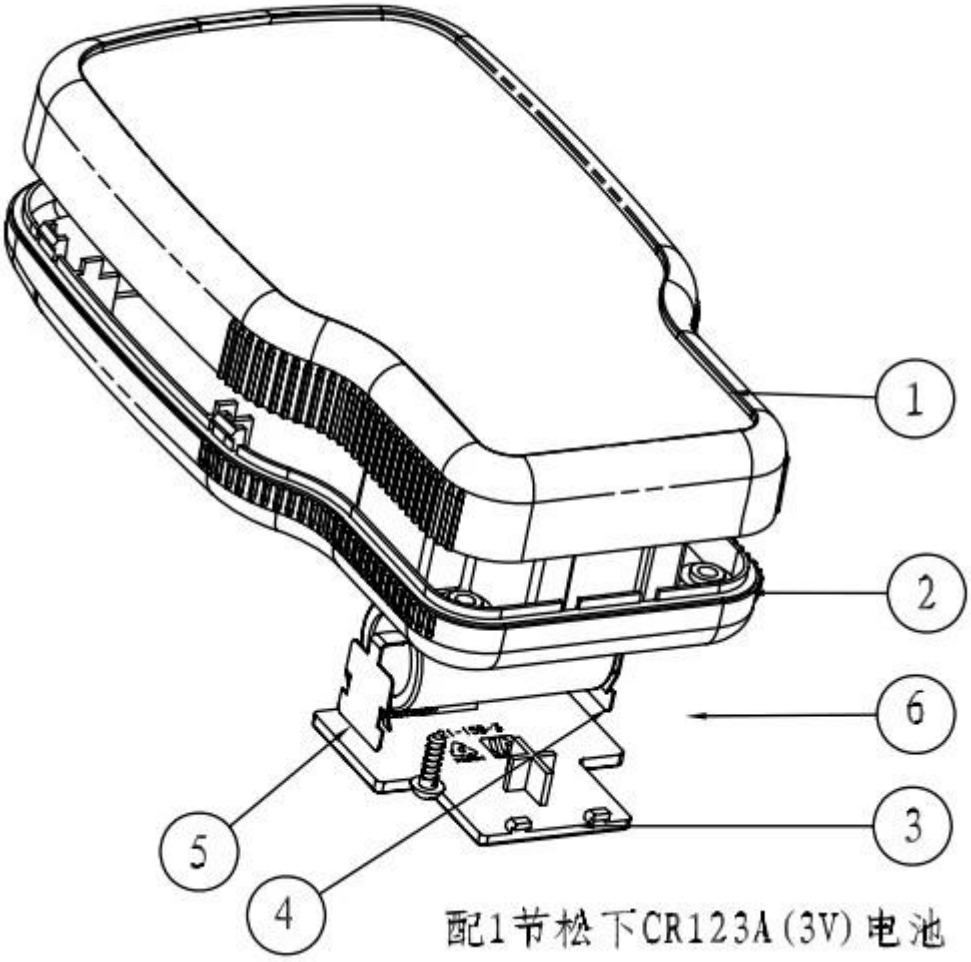

配1节松下CR123A(3V)电池

QQ 505924585

Tel 86-755-83222882
86-13028816914

Add 628Room,505 Building ,Shangbu industry, Hangtian road ,Futian district ,Shenzhen, China,518031

Email lily@szomk.net

skype szomk006