SZOMK[illegible]
1.[illegible]
2.[illegible]
3.[illegible]

[illegible]
1[illegible]
2[illegible]
3[illegible]3-5[illegible]
4[illegible]

[illegible]

SZOMK

Customizable
cutout, sticker
silkscreen, color

Weight: 36g
Model No.AK-S-02

Size: 3.74*2.17*0.91 inch
95*55*23 mm

SZOMK

SZOMK

SZOMK

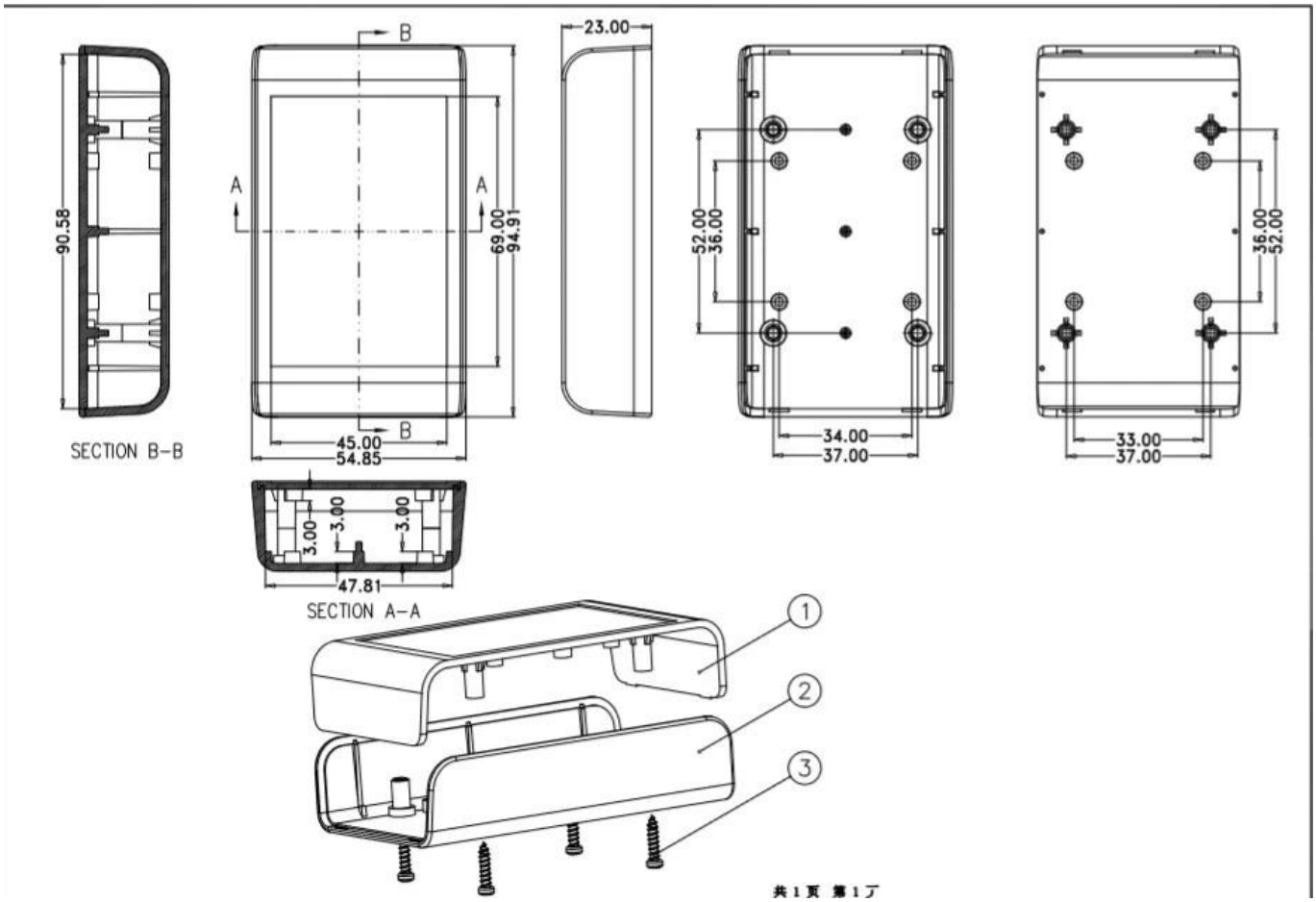
B
23.00
A
A
90.58
69.00
94.91
52.00
36.00
36.00
52.00
SECTION B-B
B
45.00
54.85
34.00
37.00
33.00
37.00
3.00
3.00
3.00
47.81
SECTION A-A
1
2
3
共1頁 第1了

□□□□

Company Information

Shenzhen Futian Huaqiang Electronic World OMK Electronic Sales Departmen

This complex,during long years of efforts with it's own experienced group and sole facilities for improvement of productions and promotion of products quality, is now one of the largest suppliers of all kinds of metallic and plastic enclosures in different fields of electronic,electrical,communication,medical,industrial and research prtojects purposes.

In today's industrial world and with the rapid development of all industries,the need of these products is sensed more than ever.Therefore by offering the best quality and service,we try to meet these needs and help you to reach your ideals.

Factory and showroom

Exhibition

Certificate
SGS
ISO 9001

Packaging & Shipping
TNT
sure we can
ups
WE LOGISTICS
SF EXPRESS
顺丰速运
FedEx
Express
EMS
DHL
PayPal
WESTERN UNION
VISA
ESCROW
MasterCard
HSBC

□□□□

QQ 2110283100

Tel 81-755-83222882
+86 18819074698

Add 16-6Floor, 505Building ,Shangbu Industry Area,Hangtian RD,Futian District ,Shenzhen China

Email teddy@szomk.net

skype teddy@szomk.net

WeChat teddy07277