[illegible]

1.[illegible]
2.[illegible]
3.[illegible]
4.[illegible]
5.[illegible]
6.[illegible]
7.[illegible]
8. PVC[illegible]
9.[illegible]
10.[illegible]

[illegible]

[illegible]

[illegible]

[illegible]24[illegible] [illegible]-[illegible]

SZOMK

Customizable
Cutout,sticker
Silkscreen,color

Weight :169 g

Size:7.99*3.94*1.38 inch

Model No.AK-H-32 203*100*35 mm

SZOMK

SZOMK

SZOMK

SZOMK

SZOMK

SZOMK

SZOMK

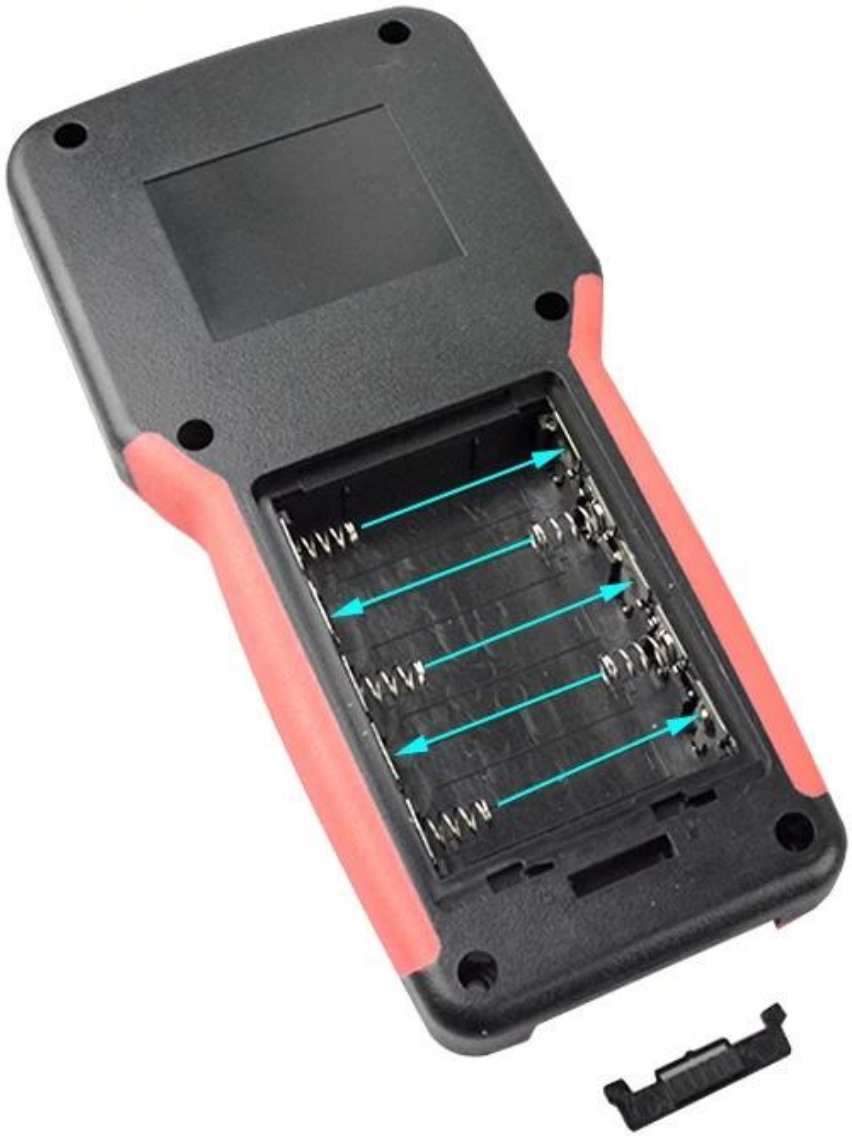

SZOMK

SZOMK

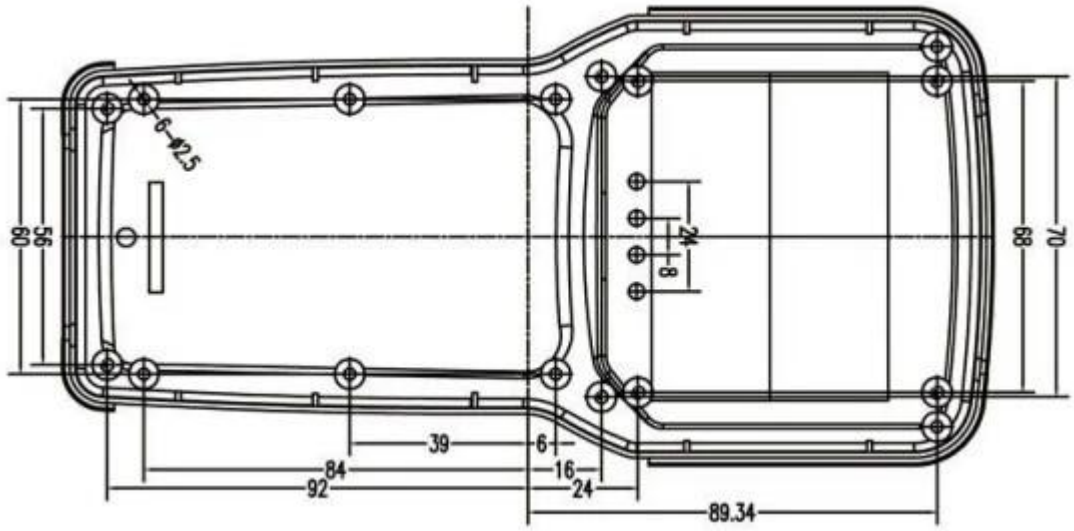
6-Ø2.5
60
56
24
8
68
70
39
6
84
16
92
24
89.34

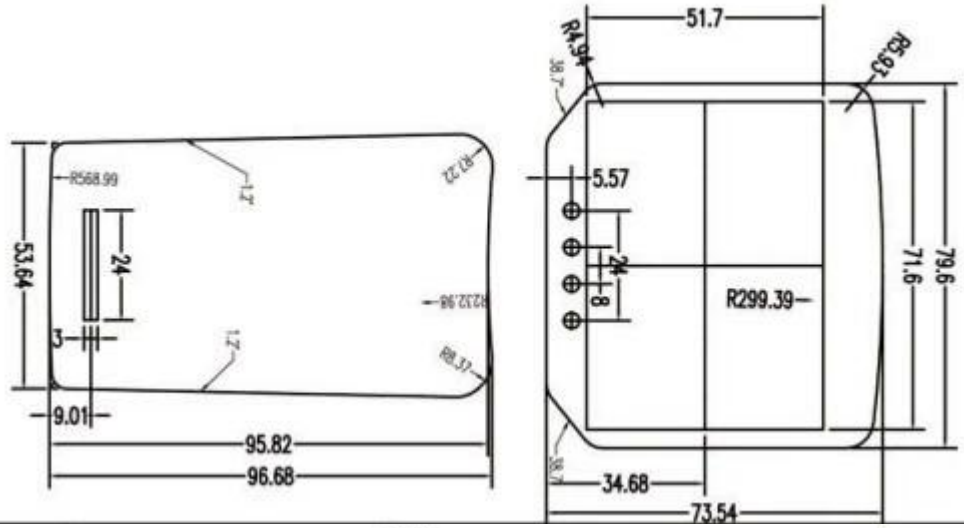
R568.99
1.2
R7.22
53.64
24
R232.98
3
1.2
R8.37
9.01
95.82
96.68
51.7
R4.94
38.7
R5.93
5.57
24
8
R299.39
71.6
79.6
38.7
34.68
73.54

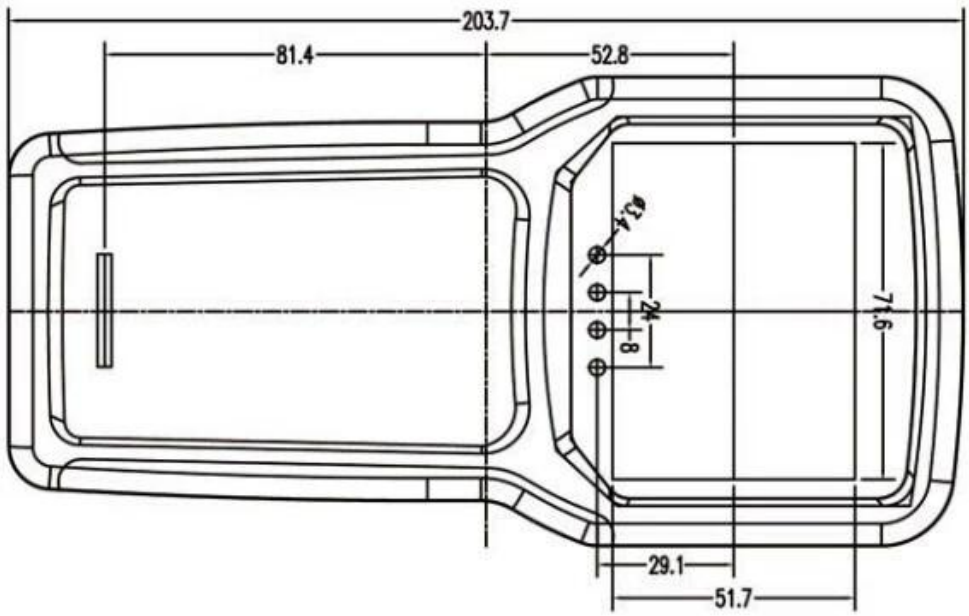
203.7
81.4
52.8
Ø3.4
24
8
71.6
29.1
51.7

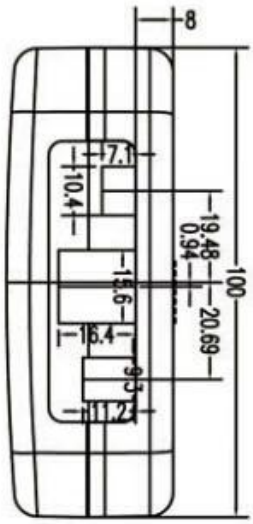
8
7.1
10.4
19.48
0.94
100
15.6
20.69
16.4
9.3
11.2

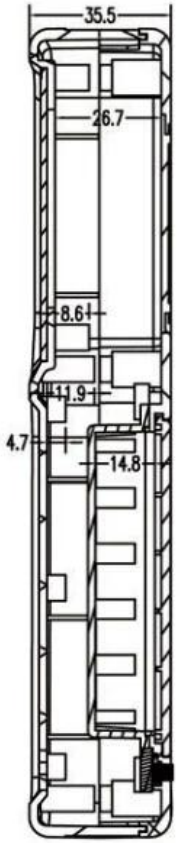

??
A-A

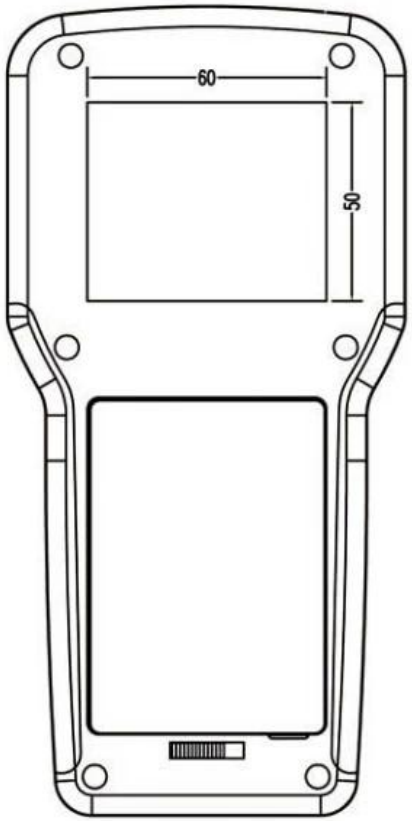

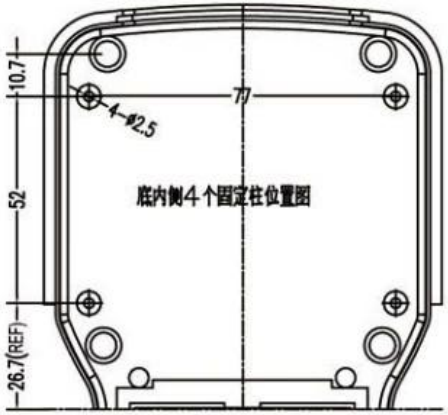

QQ 505924585

Tel 86-755-83222882
86-13028816914

Add 628Room,505 Building ,Shangbu industry, Hangtian road ,Futian district ,Shenzhen, China,518031

Email lily@szomk.net

skype szomk006