[illegible]

1.[illegible]
2.[illegible]
3.[illegible]
4.[illegible]
5.[illegible]
6.[illegible]
7.[illegible]
8. PVC[illegible]
9.[illegible]
10.[illegible]

[illegible]

[illegible]

[illegible]

[illegible]24[illegible] [illegible]-[illegible]

SZOMK

**Customizable**
**Cutout,sticker**
**Silkscreen,color**

**Weight :105 g Size :5.91*3.07*1.54 inch**
**Model No.AK-H-43 150*78*39 mm**

SZOMK

SZOMK

SZOMK

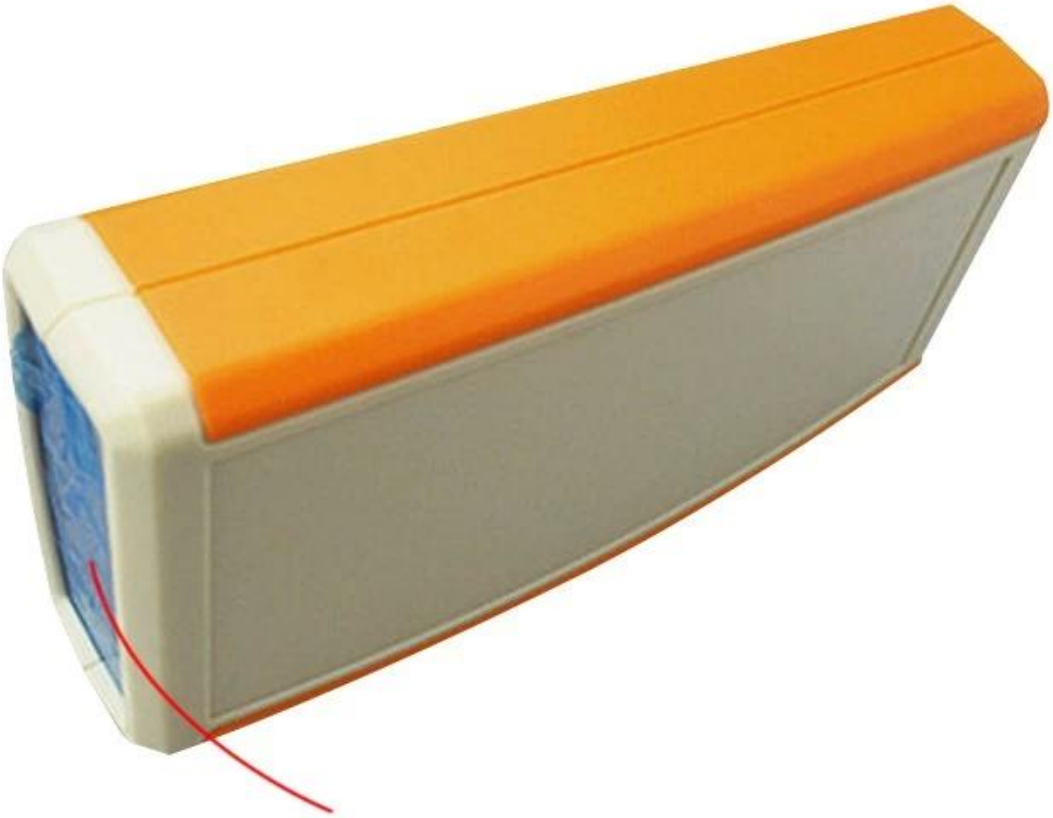

***Aluminum end palte***

SZOMK

SZOMK

SZOMK

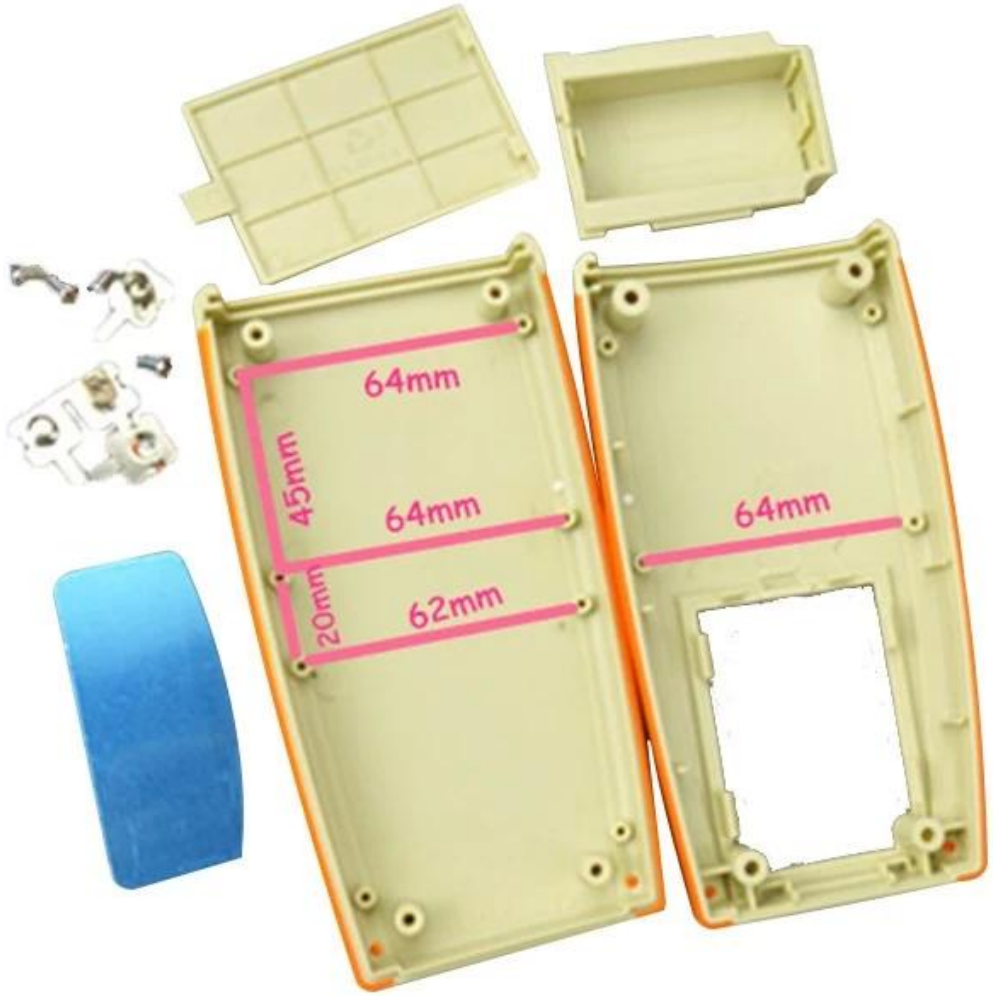

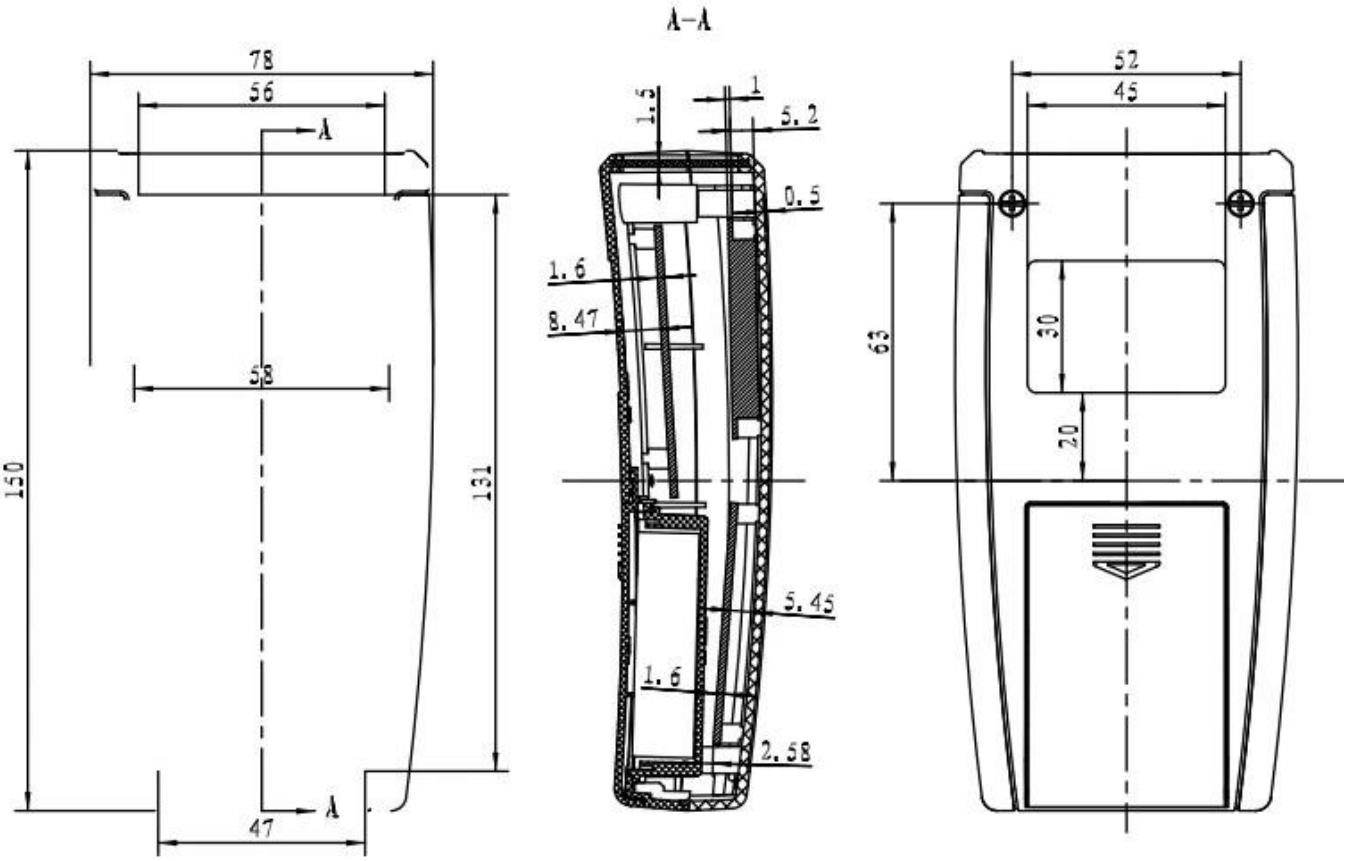
A-A
78
56
A
58
150
131
A
47
1.5
1
5.2
0.5
1.6
8.47
5.45
1.6
2.58
52
45
63
30
20

上盖线路板尺寸

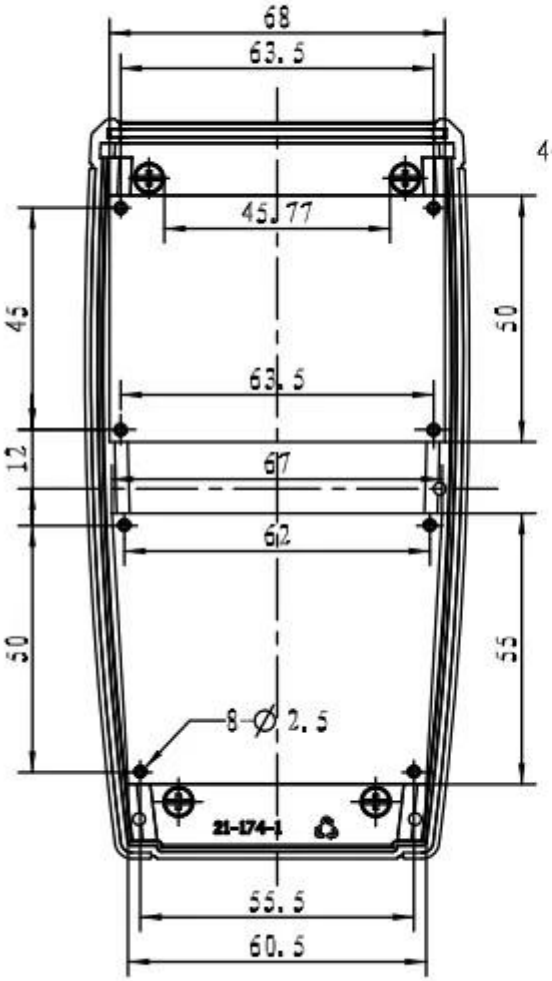


下壳线路板和电池仓尺寸

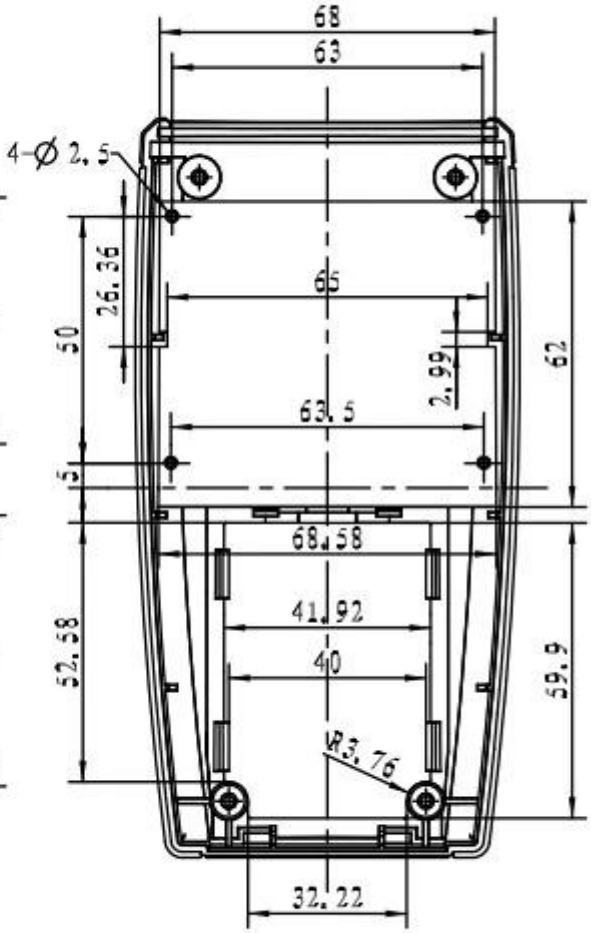

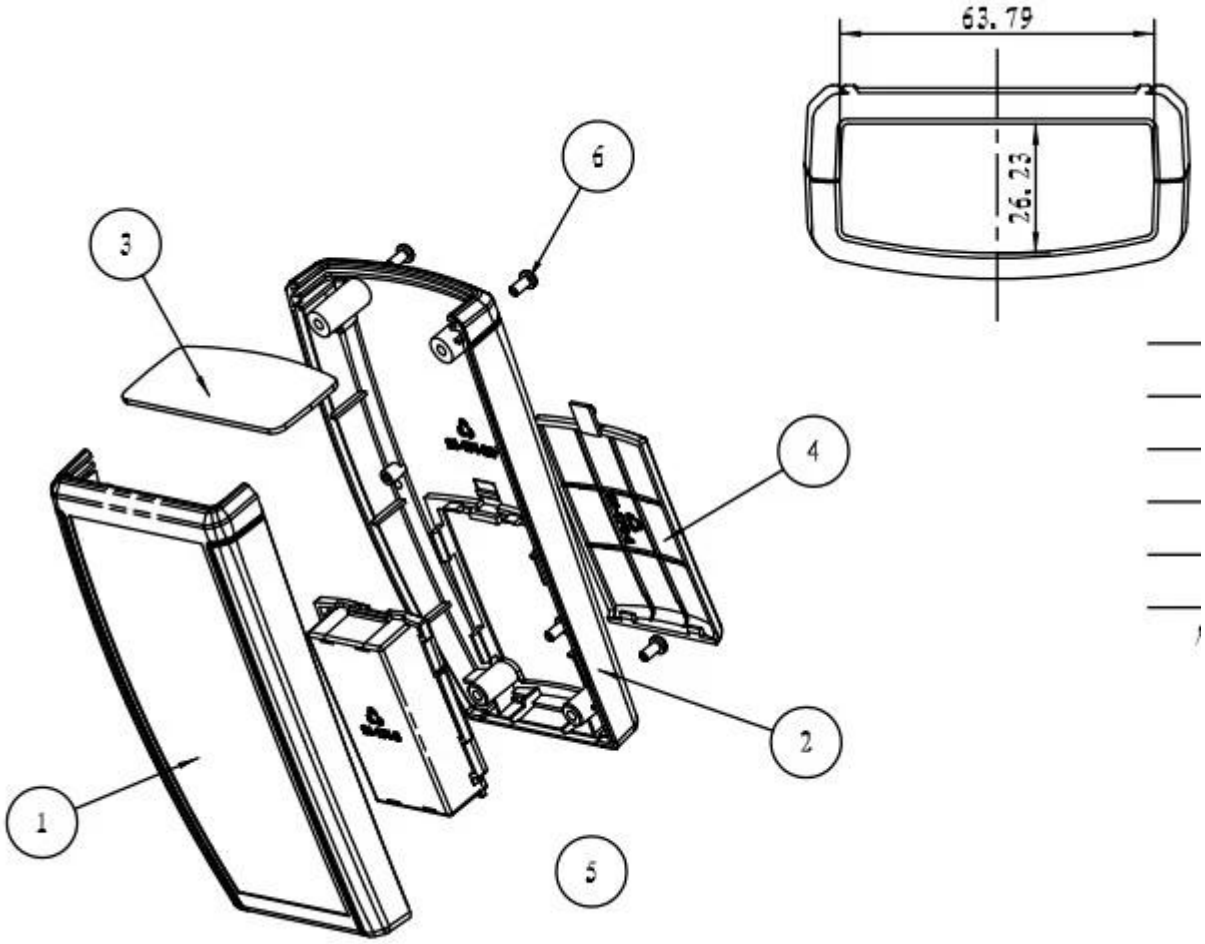
63.79
26.23
1
2
3
4
5
6

QQ 505924585

Tel 86-755-83222882
86-13028816914

Add 628Room,505 Building ,Shangbu industry, Hangtian road ,Futian district ,Shenzhen, China,518031

Email lily@szomk.net

skype szomk006