[illegible]

1[illegible]1[illegible]
2[illegible]
3[illegible]
4[illegible]
5[illegible]IP68
6[illegible]

[illegible]

1[illegible]
2[illegible]
3[illegible]3-5[illegible]
[illegible]4[illegible]

[illegible]

[illegible]

[illegible]

[illegible]24[illegible]

[illegible]

SZOMK

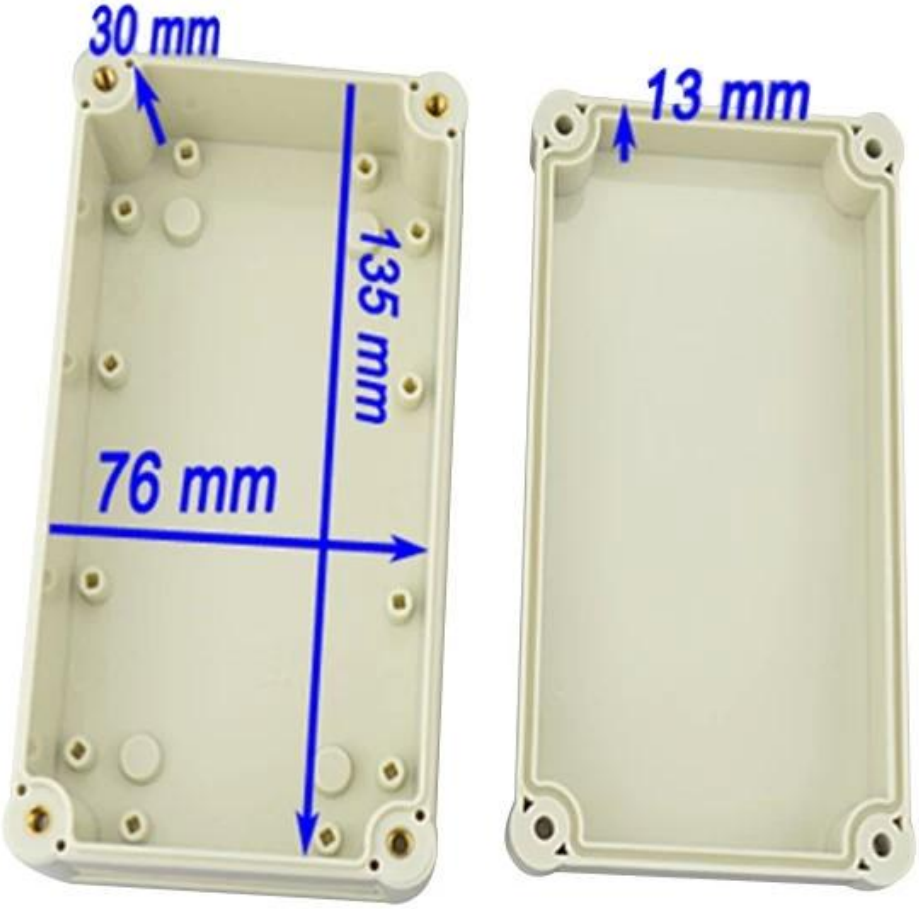

SZOMK

SZOMK

SZOMK

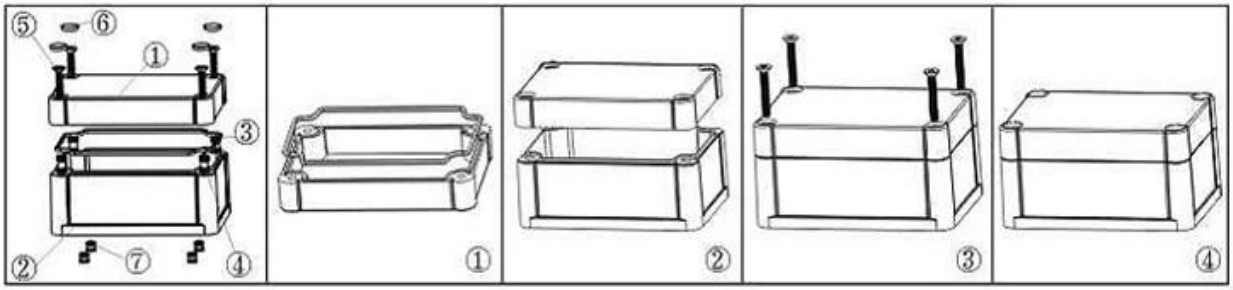

Epitheca (1PCS)
Material:ABS
Color:Light Grey(FS20412)

Hypotheca (1PCS)
Material:ABS
Color:Light Grey(FS20412)

Gasket (1PCS)
Material:Rubber
Size:96.5*64.5*1.8 mm

Copper Nut(4PCS)
Material:Copper
Standard:M4*10
Color:Copper

Grub Screw(4PCS)
Material:Stainless Steel
Standard:M4*25

Screw Lid(6PCS)
Material:ABS
Color:Light Grey(FS20412)

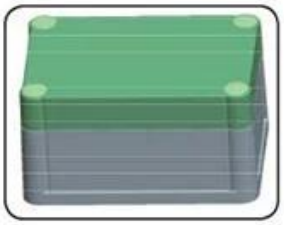

SZOMK

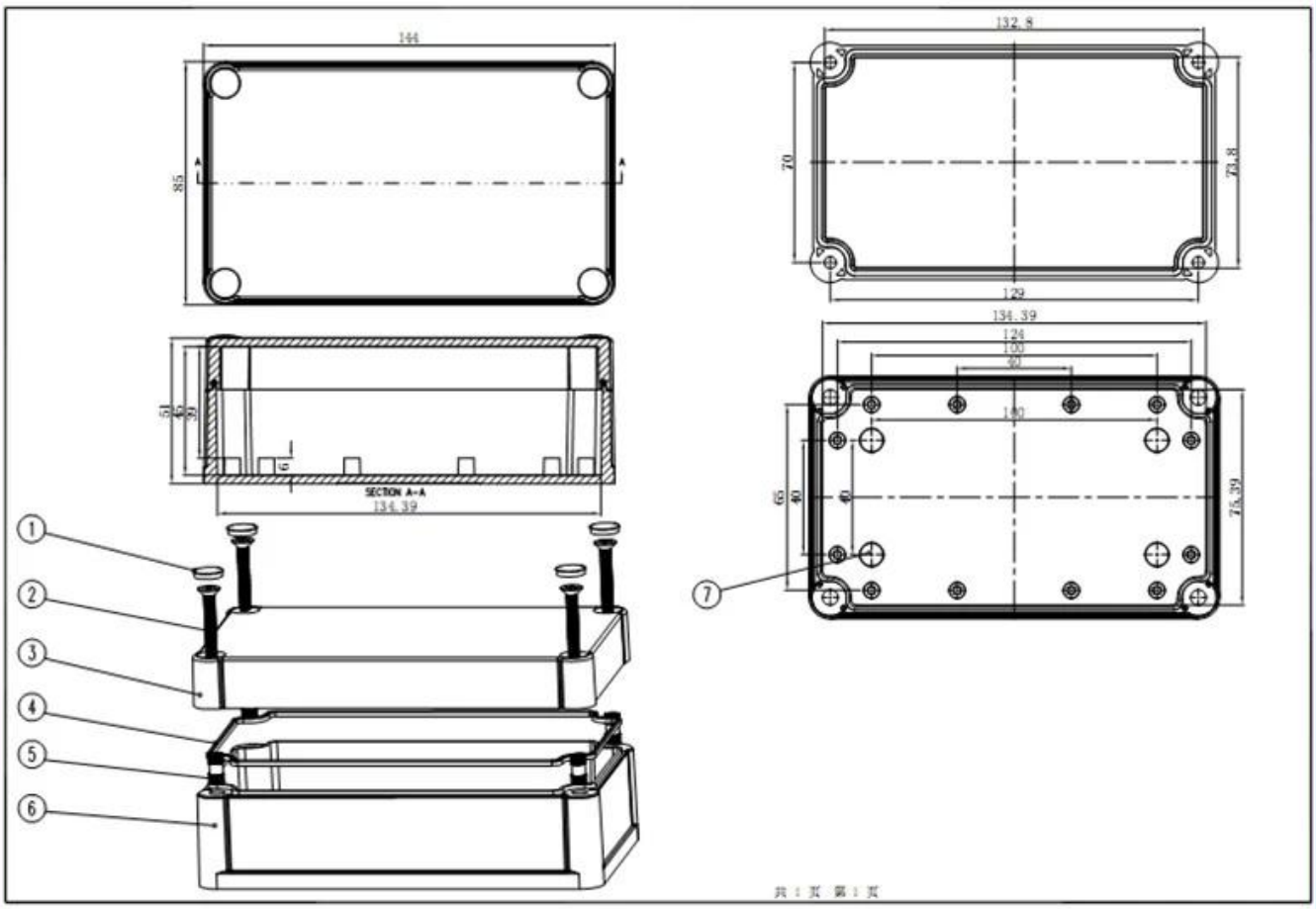
144
85
132.8
70
73.8
129
134.39
124
100
90
160
65
80
40
75.39
51
40
30
6
SECTION A-A
134.39
1
2
3
4
5
6
7
共 1 页 第 1 页