Detalles rápidos

1 Lugar de origen: Zhejiang, China (continental)
2 Marca: AMK
Número 3 del modelo: AK126R-5.0
4 Número de contactos: 10.1 Conductor
5 Tamaño: 5.0mm
6 Tipo: Tornillo
7 Nombre: Nylon eléctrica Bloque de terminales
8 Paso: 5,0 mm, 3,96 mm
9 Calificación: 250V 8A
10 Color: Verde
11 Pole: 2p 3p a cualquier polo

Packaging & amp; amp; Entrega

Detalles de empaquetado: 1000pcs / polybag y soporte de cartón de exportación.
Detalle de la entrega: 3-5days Plazo de ejecución corto

Nylon eléctrica Bloque de terminales se caracteriza principalmente por el monómero y la soldadura de placa de circuito y el cableado fácil, y conexión de tornillo fiable. El tono es 3,5, 3,81, 5,0, 5,08, y así sucesivamente. El producto se puede combinar 2P y 3P Con. Los productos sin costura son disponible. Las direcciones de cableado son frontales, laterales, la pendiente y otros estilos diferentes.

Technical Parameters for Screw Terminal Block/Connector :

Electrical Specification	Mechanical Specification	Part & Material
Rated: 250V,16A	Temp.Range:-40C-+105 C	Body: PA66,UL94V-0
Contact resistence: 20mΩ Max	Max Soldering: +250 C,5s	Screw: Steel,Zn plating
Insulation resistence: 5000MΩ Min	Wire range: 26-14AWG(2.5MM2)	Wire Protector: Bronze,Ni plating
Dielectric strength : 1500VAC min/60 seconds	Strip Length: 6 -7mm	Terminal: Brass,Tin plating

Pitch:

5.0mm,3.96mm

Poles:

2pole 3pole to any poles

SZOMK

- Top quality products with certification of CE,UL,ROHS
- Short lead time,normally 3-5 days after payment
- Prompt reponse for your inquiry

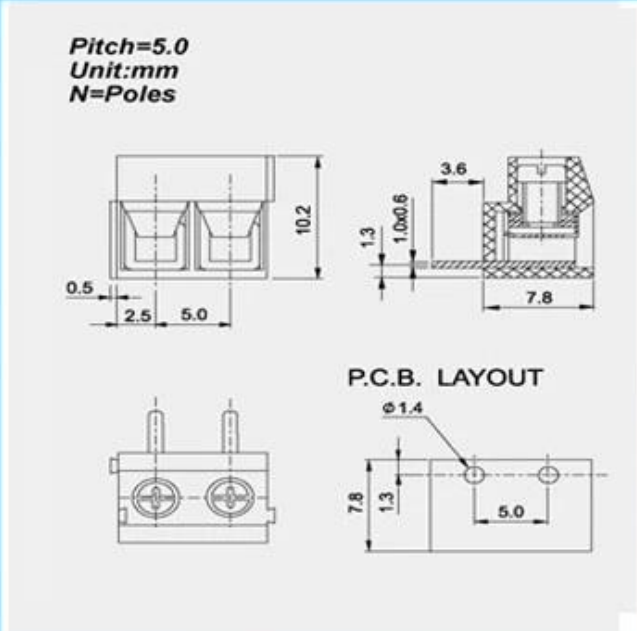

Company Information

Shenzhen Futian Huaqiang Electronic World OMK Electronic Sales Departmen

This complex,during long years of efforts with it's own experienced group and sole facilities for improvement of productions and promotion of products quality, is now one of the largest suppliers of all kinds of metallic and plastic enclosures in different fields of electronic,electrical,communication,medical,industrial and research prtojects purposes.

In today's industrial world and with the rapid development of all industries,the need of these products is sensed more than ever.Therefore by offering the best quality and service,we try to meet these needs and help you to reach your ideals.

Certificate

Exhibition

Factory and showroom

SZOMK

Shenzhen Futian Huaqiang Electronic World OMK
Electronic Sales Department

Tel: +86-755-83222882 E-mail: *ivy@szomk.com.cn*

HOME