Introducción de carcasa de aluminio

La anodización gabinete de aluminio se utiliza como un ánodo, colocado en el electrolito, formado artificialmente el recinto que tiene una película protectora de óxido de aluminio en la superficie.

características de cerramiento de aluminio:

1. Tiene una gran resistencia a la abrasión, a la intemperie, a la corrosión.

2. se puede formar en la superficie de una variedad de colores, para maximizar ajuste a sus requisitos.

3. Tener una fuerte dureza, puede estar bien protegido sus equipos electrónicos.

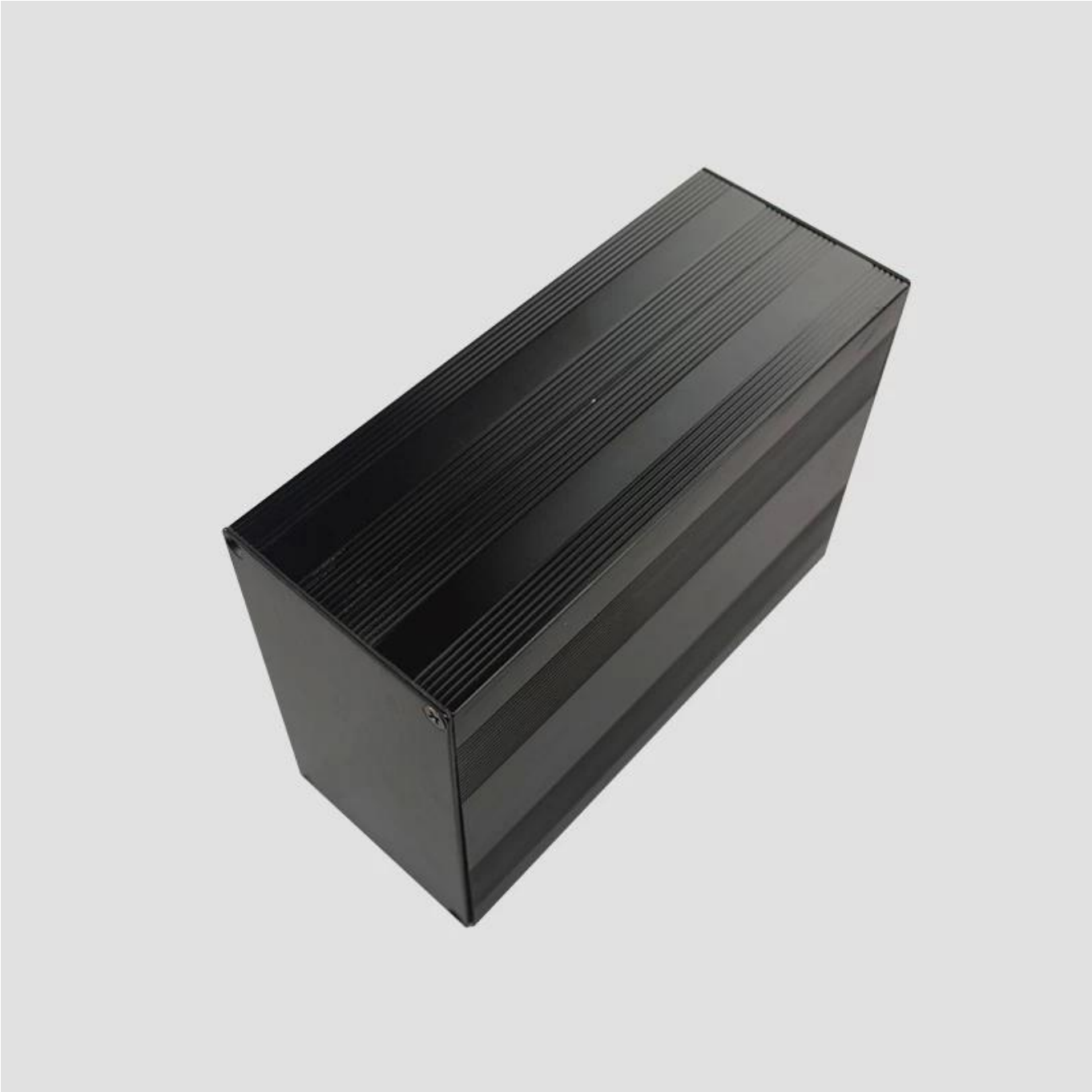

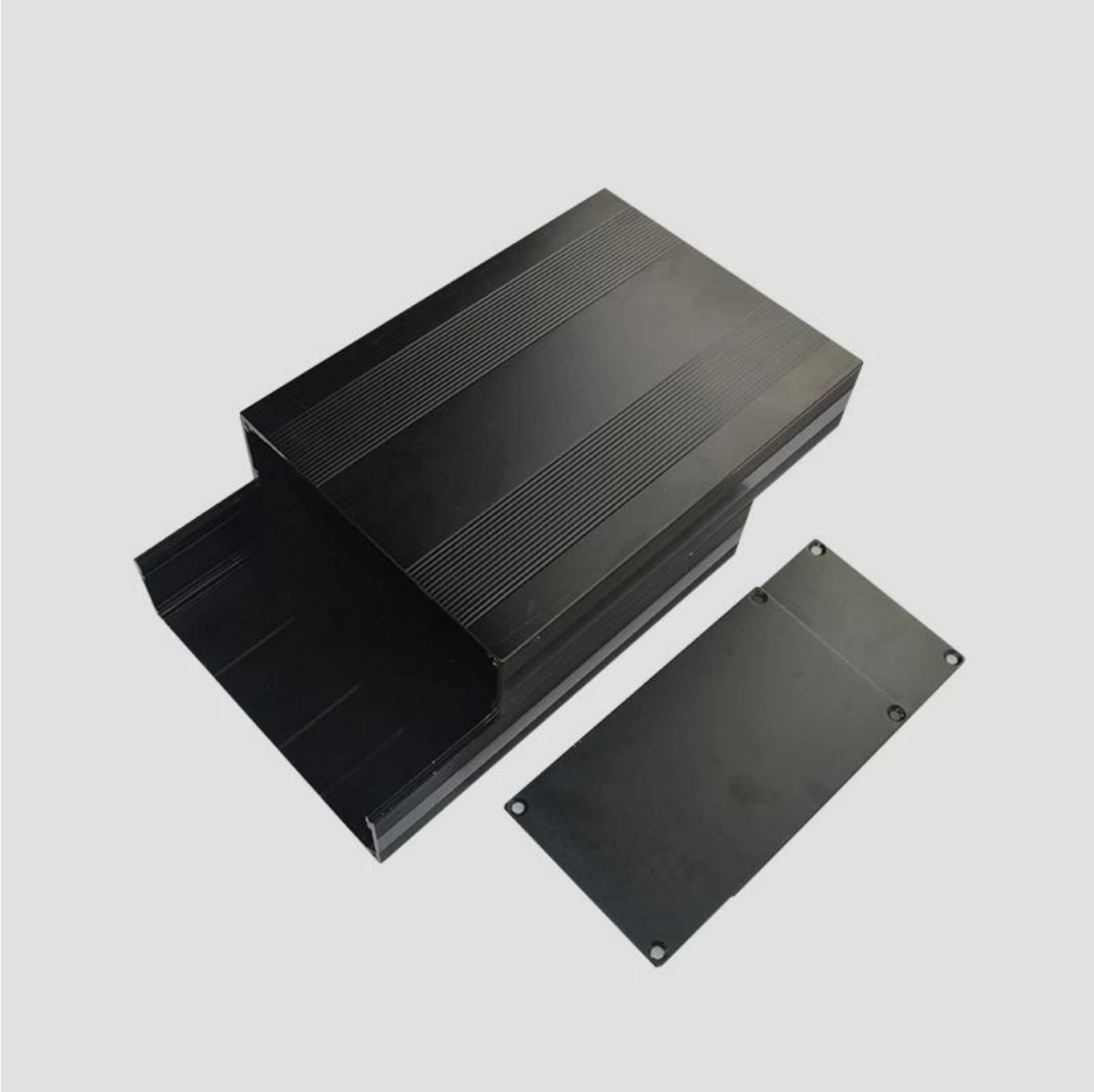

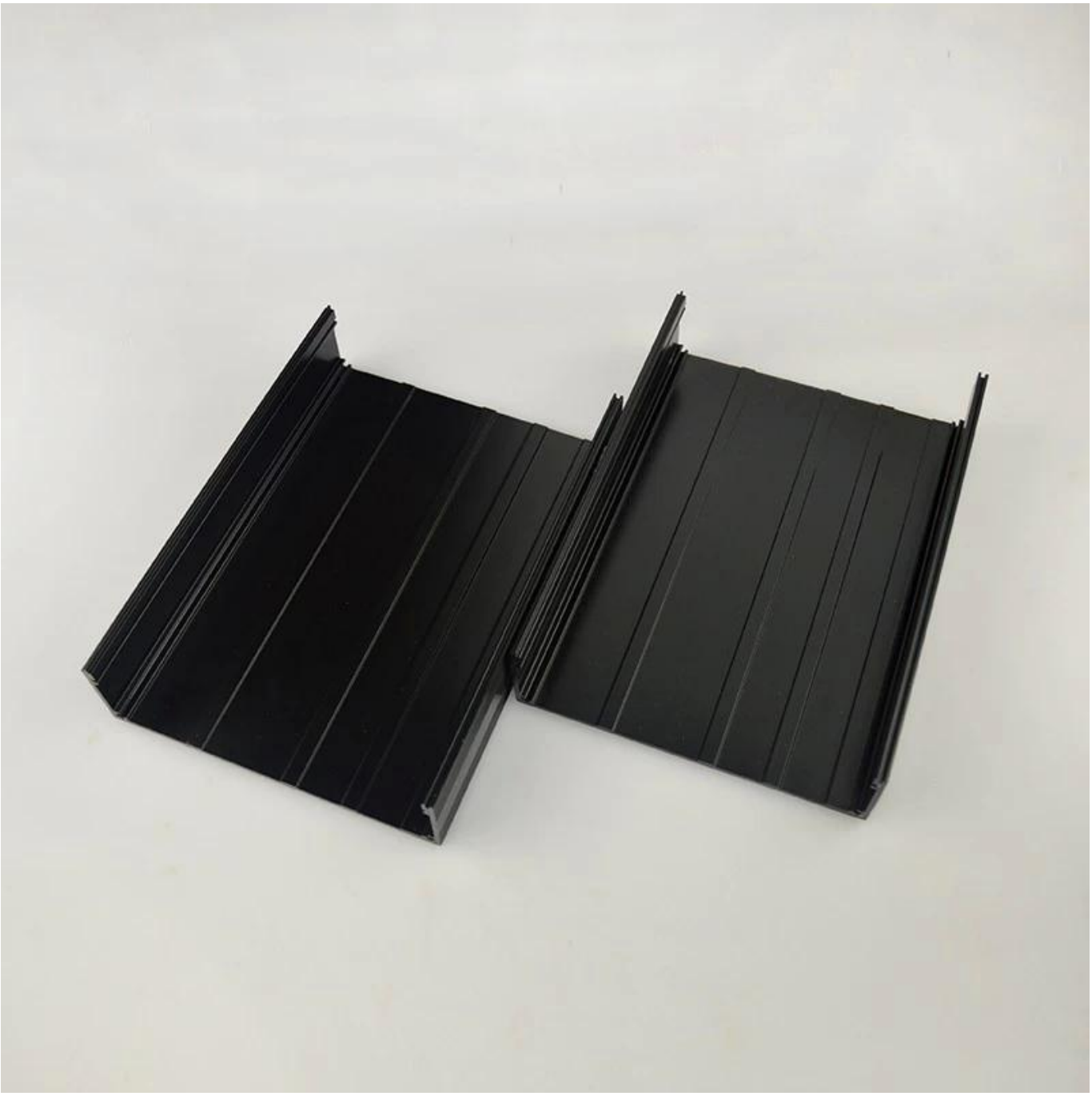

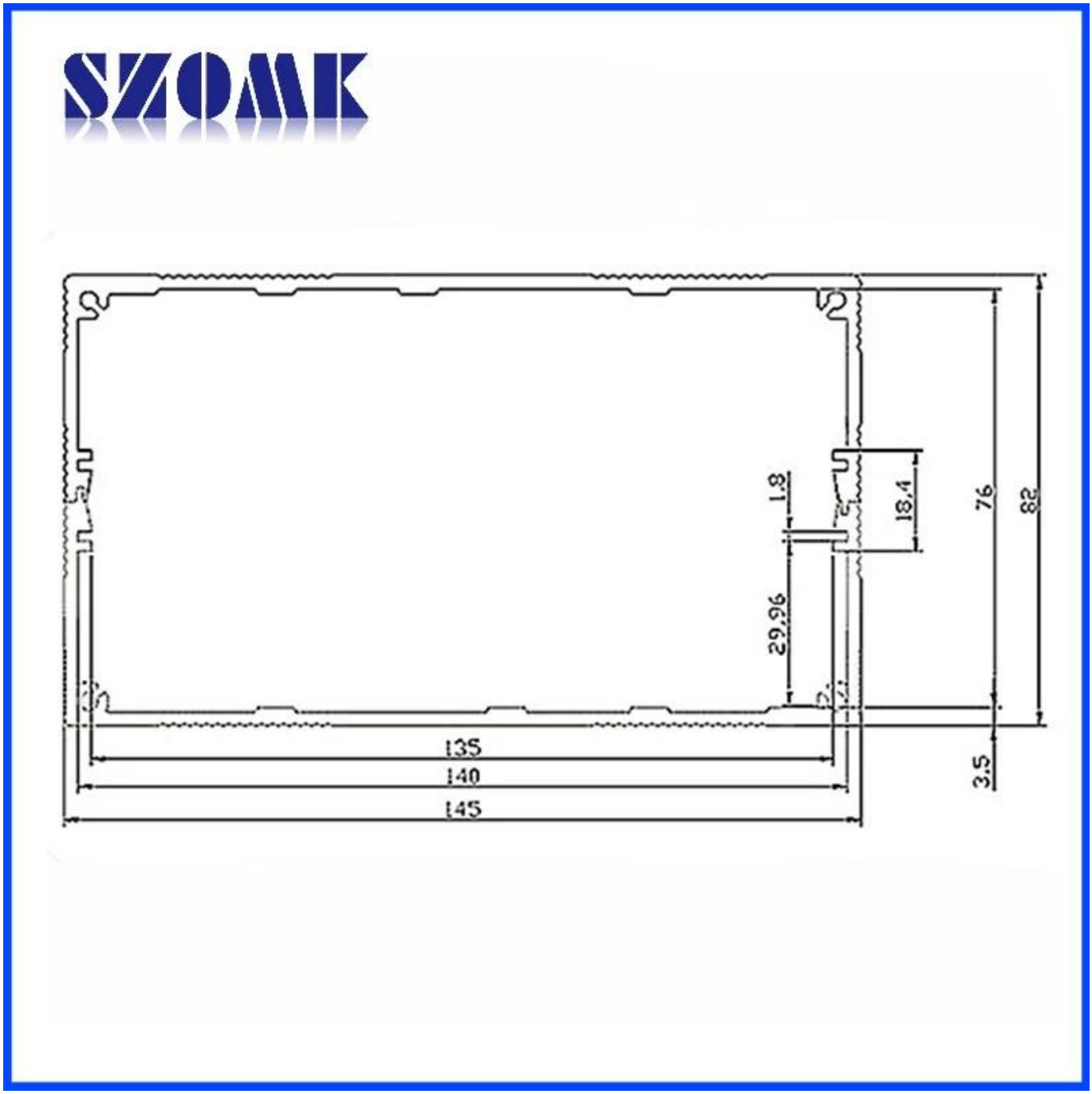

Los servicios que prestamos en Personalizar para carcasa de aluminio:

1.Length, color, recortes
Proceso 2.Finish:
   recubrimiento en polvo
   pulido
   papel de aluminio cepillado
3.log impresión:
   seda-sreen
   láser de grabado
   etiqueta engomada
   Etiqueta de PVC

Wall-mounting series

Size List:HxWxfree(mm)

Length can be random

AK-C-A1	36x147	AK-C-A17	40.5x97
AK-C-A2	41x147	AK-C-A18	80x234
AK-C-A3	29x129	AK-C-A19	40x80.5
AK-C-A4	28x104	AK-C-A20	33x105
AK-C-A5	32x155	AK-C-A21	39x96
AK-C-A6	71x190	AK-C-A22	24x76
AK-C-A7	46x190	AK-C-A23	58x180
AK-C-A8	38x88	AK-C-A24	29x164
AK-C-A9	48x204	AK-C-A25	61x147
AK-C-A10	38x150	AK-C-A26	35x120
AK-C-A11	55x150	AK-C-A27	36x85
AK-C-A12	45x138	AK-C-A28	28x165
AK-C-A13	55x147	AK-C-A29	52x165
AK-C-A14	30x67	AK-C-A30	33.5x103
AK-C-A15	73.5x250	AK-C-A31	39x144
AK-C-A16	24x80	AK-C-A32	26x66

Nomal series

Size List:HxWxfree(mm)

Length can be random

AK-C-B1	45x70	AK-C-B33	35x80
AK-C-B2	23x44	AK-C-B34	28x84
AK-C-B3	43x66	AK-C-B35	27.5x66.2
AK-C-B4	24x64	AK-C-B36	47x132
AK-C-B5	27x66	AK-C-B37	25x58
AK-C-B6	28x58	AK-C-B38	22.4x61
AK-C-B7	25x40	AK-C-B39	30.5x72
AK-C-B8	20x54	AK-C-B40	27.5x81
AK-C-B9	44x80	AK-C-B41	26x108
AK-C-B10	19x52	AK-C-B42	40x93
AK-C-B11	22x104	AK-C-B43	45x240
AK-C-B12	38x63.5	AK-C-B44	30x80
AK-C-B13	33x70	AK-C-B45	42.7x65.8
AK-C-B14	32x23	AK-C-B46	33x61
AK-C-B15	29x75	AK-C-B47	45.2x70.8
AK-C-B16	25x82	AK-C-B48	30x79
AK-C-B17	35x65	AK-C-B49	24x58
AK-C-B18	39x80	AK-C-B50	35x90
AK-C-B19	29x67	AK-C-B51	20x65
AK-C-B20	27x142.5	AK-C-B52	22.5x43.5
AK-C-B21	28.8x82.8	AK-C-B53	48x100
AK-C-B22	45x122	AK-C-B54	30x55
AK-C-B23	32x82	AK-C-B55	40x50
AK-C-B24	40x157	AK-C-B56	56x75
AK-C-B25	32x138.5	AK-C-B57	23.5x64
AK-C-B26	25x66	AK-C-B58	42.5x68
AK-C-B27	24x70	AK-C-B59	23.5x101.2
AK-C-B28	19x45	AK-C-B60	33x79.2
AK-C-B29	22x55	AK-C-B61	45x60
AK-C-B30	25x64	AK-C-B62	35x70
AK-C-B31	29x46	AK-C-B63	46x66
AK-C-B32	47x88	AK-C-B64	28x122.3

Seperated style series

Size List:HxWxfree(mm)

Length can be random

AK-C-C1	40x97	AK-C-C32	26.5x76
AK-C-C2	25x98	AK-C-C33	38x91
AK-C-C3	32x82	AK-C-C34	74x90
AK-C-C4	26x26	AK-C-C35	59x90
AK-C-C5	50x205	AK-C-C36	83x120
AK-C-C6	36x76	AK-C-C37	33x96
AK-C-C7	20x50	AK-C-C38	103x120
AK-C-C8	38x52	AK-C-C39	70x120
AK-C-C9	46x76	AK-C-C40	50x91
AK-C-C10	63x120	AK-C-C41	44x90
AK-C-C11	33x11	AK-C-C42	49x120
AK-C-C12	55x106	AK-C-C43	57x76
AK-C-C13	38x88	AK-C-C44	35x120
AK-C-C14	30x105	AK-C-C45	64x136
AK-C-C15	26x71	AK-C-C46	44x100
AK-C-C16	25x40	AK-C-C47	60x82
AK-C-C17	45.5x96	AK-C-C48	25x25
AK-C-C18	45x122	AK-C-C49	88x167
AK-C-C19	45x152	AK-C-C50	50x178
AK-C-C20	47x107	AK-C-C51	61x115
AK-C-C21	51x125	AK-C-C52	101x155
AK-C-C22	54x145	AK-C-C53	81x135
AK-C-C23	54x168	AK-C-C54	122x175
AK-C-C24	82x145	AK-C-C55	55x95
AK-C-C25	68x145	AK-C-C56	22x65.2
AK-C-C26	56x96	AK-C-C57	38x61
AK-C-C27	90x90	AK-C-C58	49x61
AK-C-C28	50x110	AK-C-C59	68x65
AK-C-C29	30x88	AK-C-C60	45x61
AK-C-C30	29x90	AK-C-C61	15.2x67.3
AK-C-C31	48x91	AK-C-C62	26x78

SZOMK

Our packaging

Plastic foam packaging

Metal shell packaging

Plastic box packaging

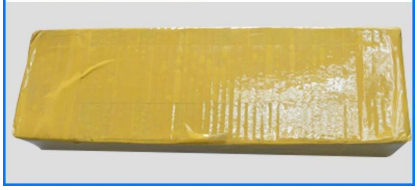

Email amber@szomk.com.cn

skype szomk-001

Tel 86-755-83222882
86-15012837543

Add 628Room,505 Building ,Shangbu industry, Hangtian road ,Futian district ,Shenzhen, China,518031

QQ 2504276569