Descripción del Producto:

1. Número de modelo: AK-S-04
2. Tamaño: 155x80x45mm
3. Color: Negro / Blanco
4. Peso: 144g

SZOMK

Customizable
Cutout,sticker
Silkscreen,color

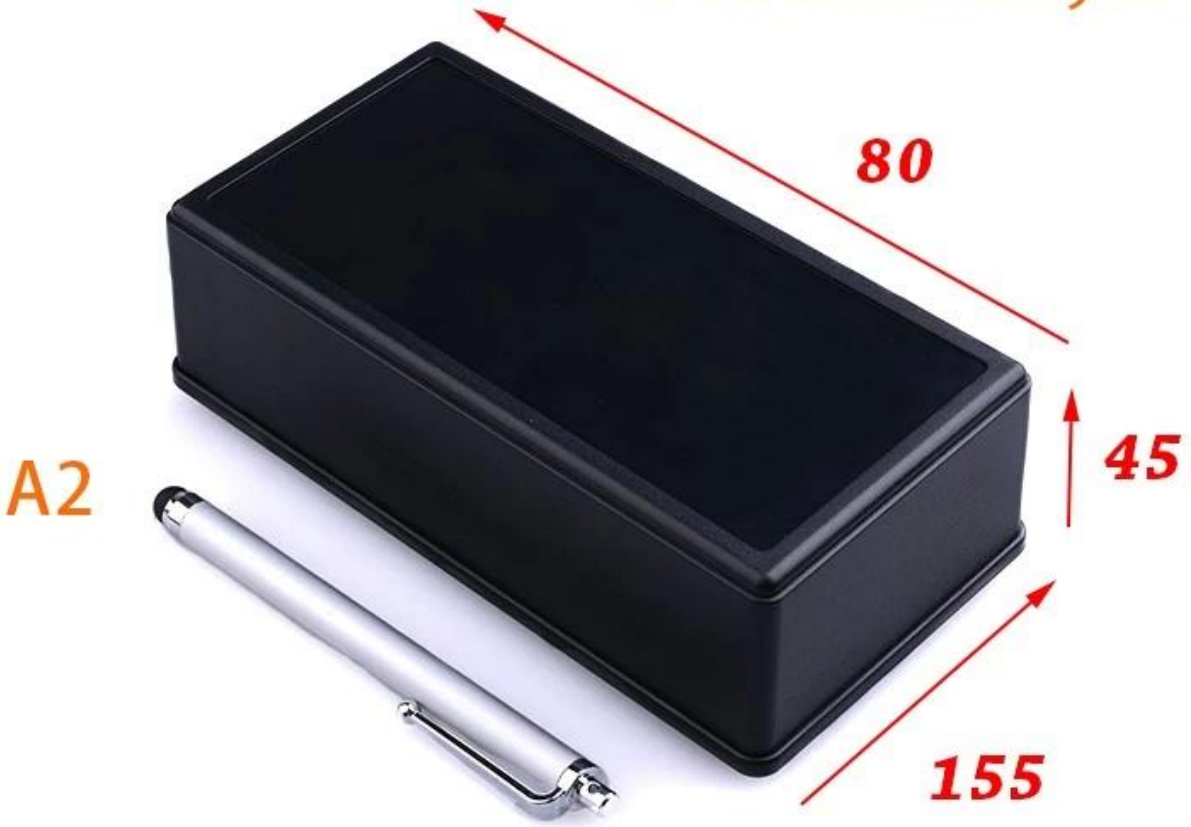

Weight :144 g

Model No. AK-S-04

155*80*45 mm
Size:6.10*3.15*1.77 inch

SZOMK
Customizable
Cutout,sticker
Silkscreen,color
155
80
45
A2
Weight :144 g
Model No. AK-S-04
155*80*45 mm
Size:6.10*3.15*1.77 inch

SZOMK

SZOMK

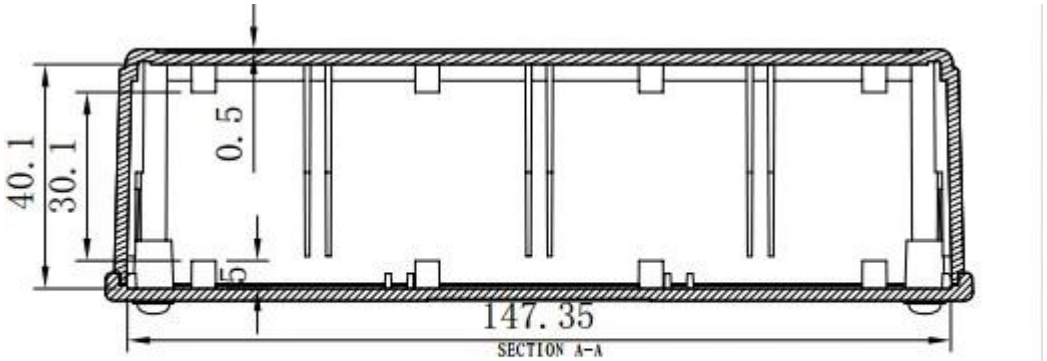
40.1
30.1
0.5
5
147.35
SECTION A-A

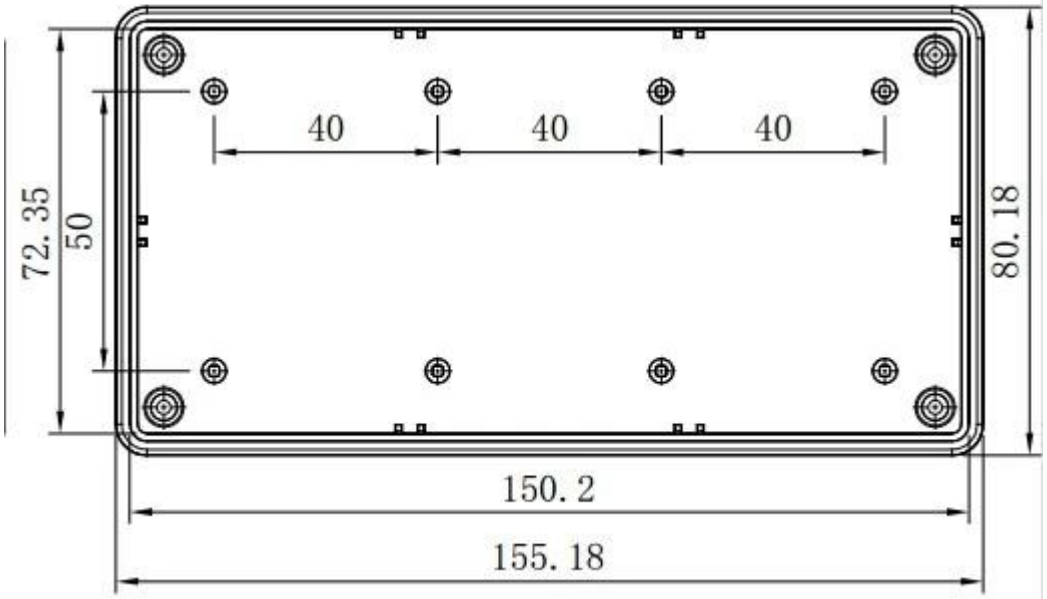
40
40
40
72.35
50
80.18
150.2
155.18

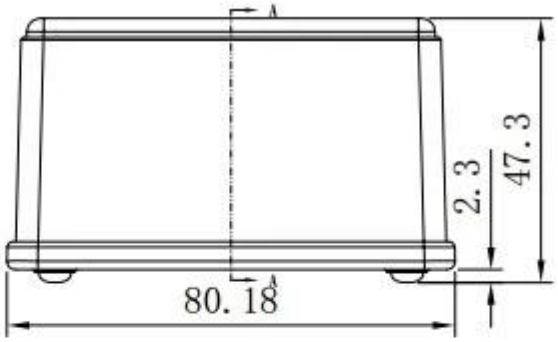
A
2.3
47.3
80.18

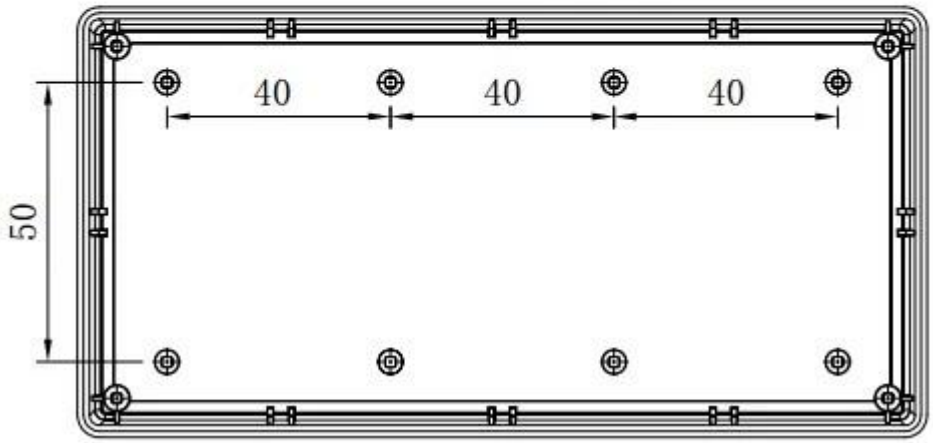
40
40
40
50

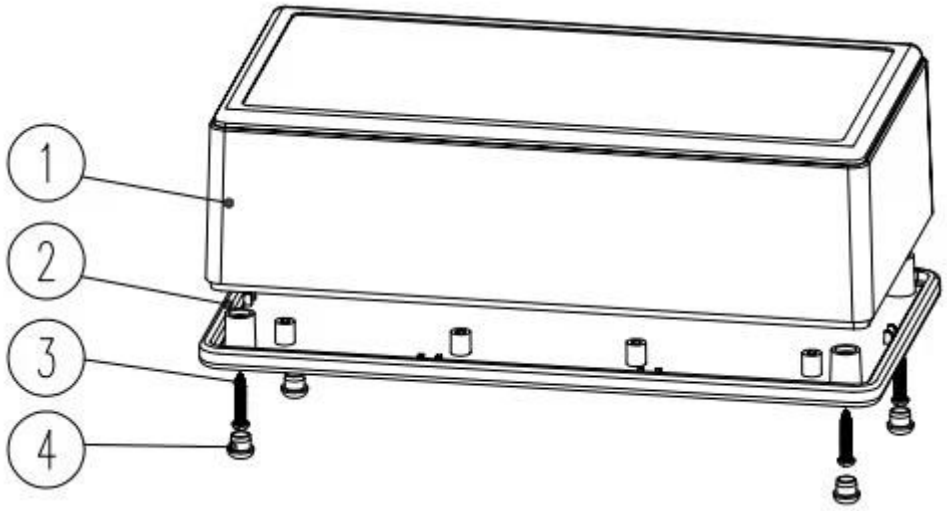

Nuestro servicio personalizado:

1. Cambio de longitud
2. Cambiar el color
3. Pulido
4. recubrimiento en polvo
5. Cepillado papel de aluminio
6. Los agujeros del taladro
7. grabado láser
8. PVC lavel
9. acrílico placa

Pantalla 10. Seda

Company Information

Shenzhen Futian Huaqiang Electronic World OMK Electronic Sales Departmen

This complex,during long years of efforts with it's own experienced group and sole facilities for improvement of productions and promotion of products quality, is now one of the largest suppliers of all kinds of metallic and plastic enclosures in different fields of electronic,electrical,communication,medical,industrial and research prtojects purposes.

In today's industrial world and with the rapid development of all industries,the need of these products is sensed more than ever.Therefore by offering the best quality and service,we try to meet these needs and help you to reach your ideals.

Exhibition

Certificate

Factory and showroom

Packaging & Shipping

TNT sure we can · UPS WE LOGISTICS · SF EXPRESS 顺丰速运 · FedEx Express · EMS · DHL

PayPal · WESTERN UNION · VISA · ESCROW · MasterCard · HSBC

SZOMK

Shenzhen Futian Huaqiang Electronic World OMK
Electronic Sales Department
Tel: +86-755-83222882 E-mail: ivy@szomk.com.cn

HOME