Caractéristiques

1, Type: boîte de boîtier en aluminium électronique pour boîtier vidéo
2, no: AK-C-B24
3, Taille: 40x157xfree (mm) 1,57 "x6.18" xfree
4, MOQ: 20pcs

# Introduction de la boîte de boîtier en aluminium électronique pour boîtier vidéo

La boîte de boîtier en aluminium pour boîte électronique vidéo est utilisée comme une anode, placée dans l'électrolyte,formé artificiellement le enceinte ayant un film d'oxyde d'aluminium sur la surface de protection.

## Aluminium case boîtier électronique pour les fonctions de boîte vidéo

1. a une forte résistance à l'abrasion, aux intempéries, à la corrosion.
2. peut être formée sur la surface d'une variété de couleurs, afin de maximiser l'adapter à vos besoins.
3. Avoir une dureté forte, peut être bien protégé vos appareils électroniques.

## Aluminium case boîtier électronique pour boîtier vidéo

| | |
|---|---|
| Type | case boîtier en aluminium électronique pour boîtier vidéo |
| Marque | SZOMK |
| Matériel | aluminium |
| Modèle No. | AK-C-B24 |
| Taille | 40 (H) x157 (W) xfree (mm) 1,57 "x6.18" xfree |
| Couleur | Black-couleurs différentes peuvent être personnalisés |
| MOQ | 20 pièces |
| Niveau de protection | IP54 |
| Délai de mise en œuvre | 7-15 jours après le paiement get |
| Emballage normal | Carton et plastique mousse et emballage de bande |

## Aluminium case boîtier électronique pour boîtier vidéo

SZOMK

**Model No**

AK-C-B24

## Aluminum box enclosure electronic for video box

**size:**
**40(H)x157(W)xfree(mm)**
**1.57"x6.18"xfree**

**Other service**

**cutholes,silkscreen**
**color,length changed**
**engraving,anodized**
**polish,powder coating**
**sticker,silicon seal**

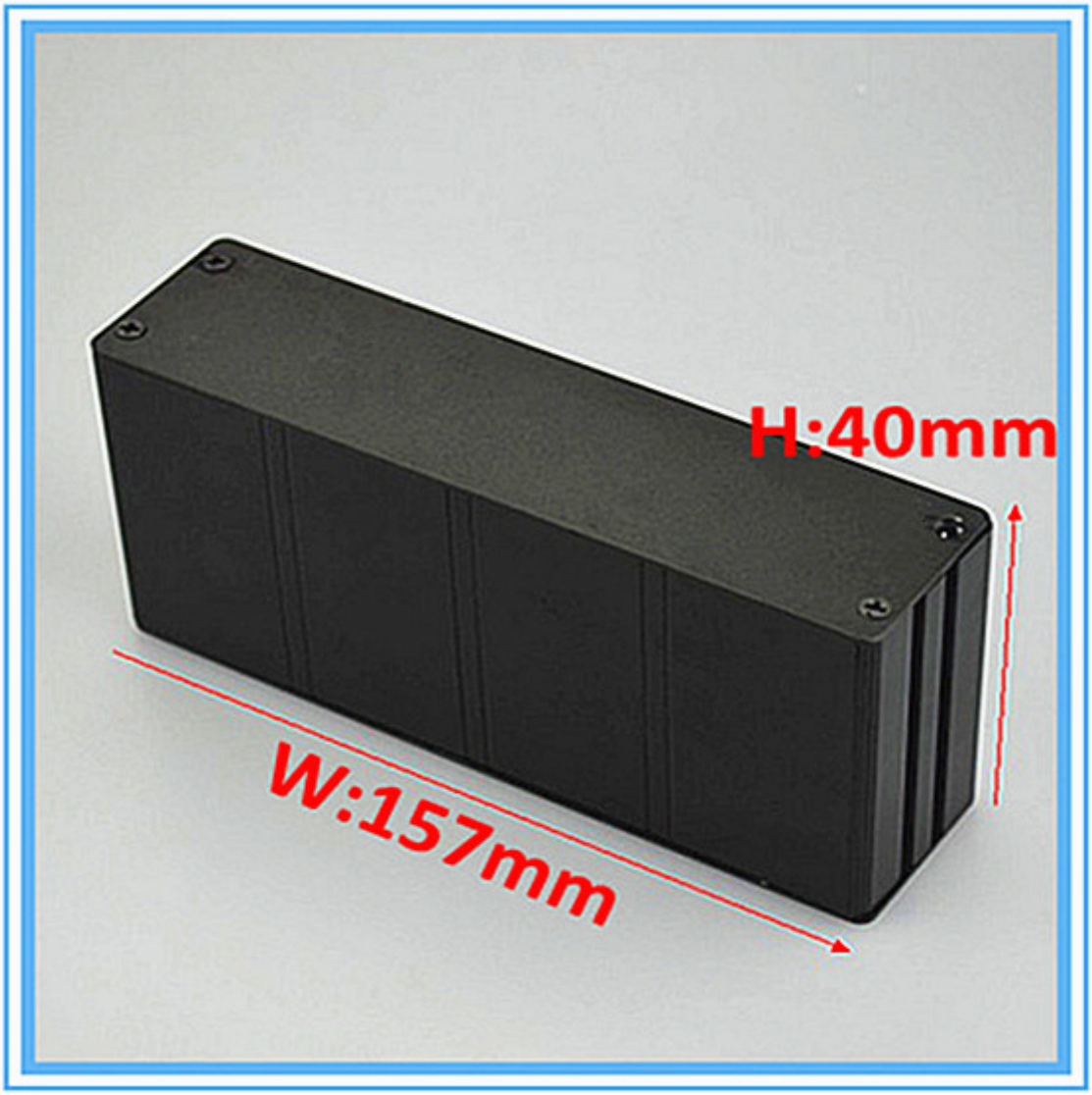


Dessin de la boîte de boîtier en aluminium électronique pour boîtier vidéo

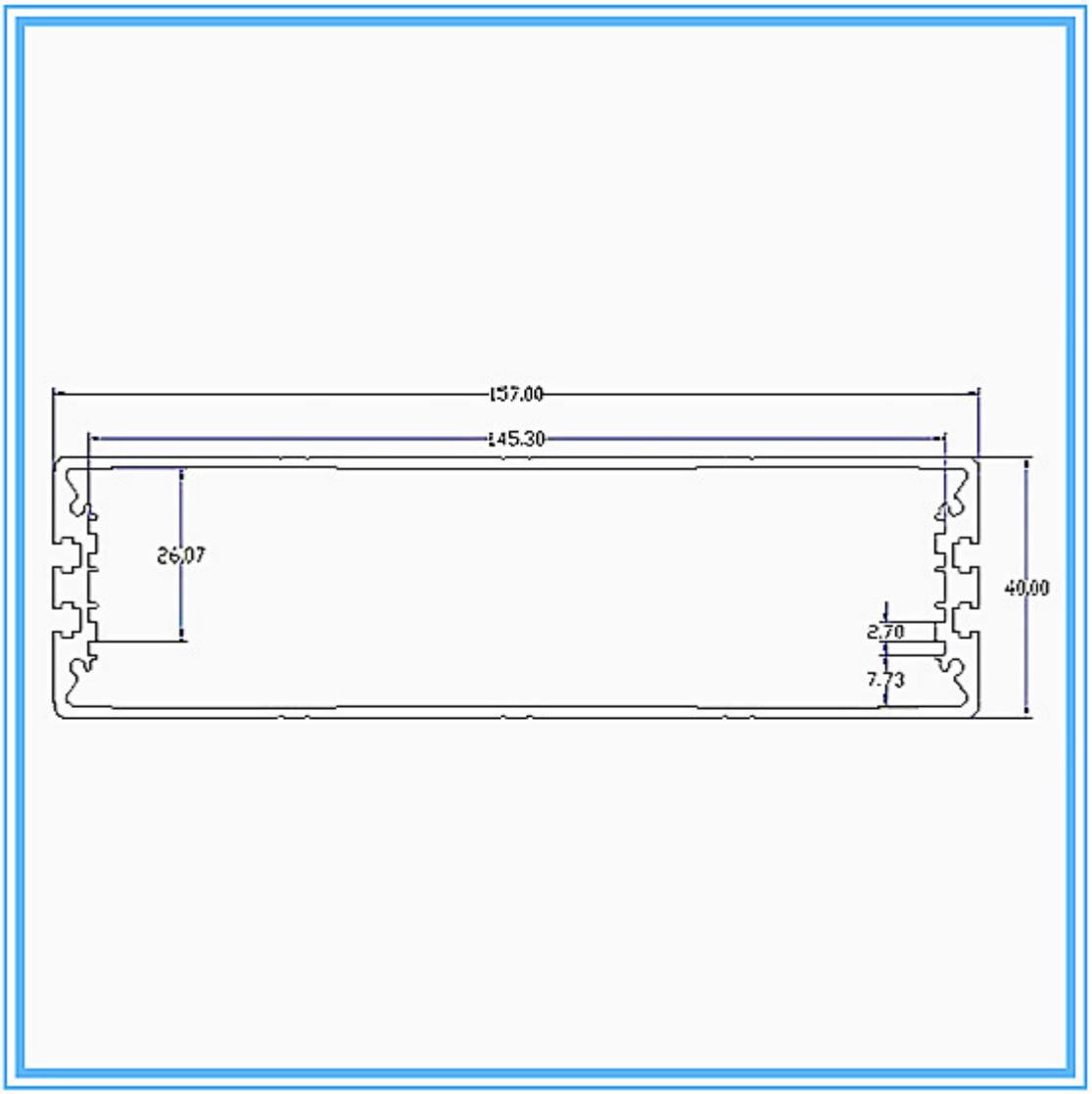


Mur série de montage boîtier en aluminium

## Wall-mounting series aluminum enclosure

### Size list (H*W*L mm) Length can be customized

AK-C-A1: 36x147xfree
AK-C-A2: 41x147xfree
AK-C-A3: 29x129xfree
AK-C-A4: 28x104xfree
AK-C-A5: 32x155xfree
AK-C-A6: 71x190xfree
AK-C-A7: 46x190xfree
AK-C-A8: 38x88xfree
AK-C-A9: 48x204xfree
AK-C-A10: 38x150xfree
AK-C-A11: 55x150xfree
AK-C-A12: 45x138xfree
AK-C-A13: 55x147xfree
AK-C-A14: 30x67xfree
AK-C-A15:73.5x250xfree
AK-C-A16: 24x80xfree
AK-C-A17:40.5x97xfree
AK-C-A18: 80x234xfree
AK-C-A19:40x80.5xfree
AK-C-A20: 33x105xfree
AK-C-A21: 39x96xfree
AK-C-A22: 24x76xfree
AK-C-A23: 58x180xfree
AK-C-A24: 29x164xfree
AK-C-A25: 61x147xfree
AK-C-A26: 35x120xfree
AK-C-A27: 36x85xfree
AK-C-A28: 27.6x131xfree
AK-C-A29: 52x165xfree
AK-C-A30: 33.5x103xfree
AK-C-A31: 39x144xfree
AK-C-A32: 26x66xfree
AK-C-A33: 37x113xfree

Normale boîtier d'aluminium de série

## Normal series aluminum enclosure

### Size list (H*W*L mm) Length can be customized

| | | |
|---|---|---|
| AK-C-B1: 44.5x70.5xfree | AK-C-B2: 23x43.7xfree | AK-C-B3: 43x66xfree |
| AK-C-B4: 24x64.2xfree | AK-C-B5: 27x66xfree | AK-C-B6: 28x57xfree |
| AK-C-B7: 25x40xfree | AK-C-B8: 20x54xfree | AK-C-B9: 44x80xfree |
| AK-C-B10: 19.6x52xfree | AK-C-B11: 22x104.5xfree | AK-C-B12: 38x63.3xfree |
| AK-C-B13: 33x70xfree | AK-C-B14: 32x32xfree | AK-C-B15: 29x74.3xfree |
| AK-C-B16: 24.5x81.4xfree | AK-C-B17: 35x64.5xfree | AK-C-B18: 37.6x80xfree |
| AK-C-B19: 28.5x67xfree | AK-C-B20: 27x142.5xfree | AK-C-B21: 28.8x82.8xfree |
| AK-C-B22: 45x122xfree | AK-C-B23: 32x82xfree | AK-C-B24: 40x157xfree |
| AK-C-B25: 32x138.5xfree | AK-C-B26: 25x66xfree | AK-C-B27: 24x70xfree |
| AK-C-B28: 19x45xfree | AK-C-B29: 22x55xfree | AK-C-B30: 25x64xfree |
| AK-C-B31: 29x46xfree | AK-C-B32: 47x88xfree | AK-C-B33: 35x80xfree |
| AK-C-B34: 28x84xfree | AK-C-B35: 27.5x66.2xfree | AK-C-B36: 47x132xfree |
| AK-C-B37: 25x58xfree | AK-C-B38: 22.4x61xfree | AK-C-B39: 30.5x72xfree |
| AK-C-B40: 27.5x81xfree | AK-C-B41: 26x108xfree | AK-C-B42: 40x93xfree |
| AK-C-B43: 45x240xfree | AK-C-B44: 30x80xfree | AK-C-B45: 42.7x65.8xfree |
| AK-C-B46: 33x61xfree | AK-C-B47: 45.2x70.8xfree | AK-C-B48: 30x79xfree |
| AK-C-B49: 24x58xfree | AK-C-B50: 35x90xfree | AK-C-B51: 20x65xfree |
| AK-C-B52: 22.5x43.5xfree | AK-C-B53: 48x100xfree | AK-C-B54: 30x55xfree |
| AK-C-B55: 40x50xfree | AK-C-B56: 56x75xfree | AK-C-B57: 23.5x64xfree |
| AK-C-B58: 42.5x68xfree | AK-C-B59: 23.5x101.2xfree | AK-C-B60: 33x79.2xfree |
| AK-C-B61: 45x60xfree | AK-C-B62: 35x70xfree | AK-C-B63: 46x66xfree |
| AK-C-B64: 28x122.3xfree | AK-C-B65: 12.5x60xfree | |

Séparé de style boîtier en aluminium de série

## Seperated style series aluminum enclosure

### Size list (H*W*L mm) Length can be customized

| | | |
|---|---|---|
| AK-C-C1: 40x97xfree | AK-C-C2: 25x98xfree | AK-C-C3: 32x82xfree |
| AK-C-C4: 26x26xfree | AK-C-C5: 50x205xfree | AK-C-C6: 36x76xfree |
| AK-C-C7: 20x50xfree | AK-C-C8: 38x52xfree | AK-C-C9: 46x76xfree |
| AK-C-C10: 63x120xfree | AK-C-C11: 33x114xfree | AK-C-C12: 55x106xfree |
| AK-C-C13: 38x88xfree | AK-C-C14: 30x105xfree | AK-C-C15: 26x71xfree |
| AK-C-C16: 25x40xfree | AK-C-C17: 45.5x96xfree | AK-C-C18: 45x122xfree |
| AK-C-C19: 45x152xfree | AK-C-C20: 47x107xfree | AK-C-C21: 51x125xfree |
| AK-C-C22: 54x145xfree | AK-C-C23: 54x168xfree | AK-C-C24: 82x145xfree |
| AK-C-C25: 68x145xfree | AK-C-C26: 56x96xfree | AK-C-C27: 90x90xfree |
| AK-C-C28: 50x110xfree | AK-C-C29: 30x88xfree | AK-C-C30: 29x90xfree |
| AK-C-C31: 48x91xfree | AK-C-C32: 26.5x76xfree | AK-C-C33: 38x91xfree |
| AK-C-C34: 74x90xfree | AK-C-C35: 59x90xfree | AK-C-C36: 83x120xfree |
| AK-C-C37: 33x96xfree | AK-C-C38: 103x120xfree | AK-C-C39: 70x120xfree |
| AK-C-C40: 50x91xfree | AK-C-C41: 44x90xfree | AK-C-C42: 49x120xfree |
| AK-C-C43: 57x76xfree | AK-C-C44: 35x120xfree | AK-C-C45: 64x136xfree |
| AK-C-C46: 44x100xfree | AK-C-C47: 60x82xfree | AK-C-C48: 25x25xfree |
| AK-C-C49: 88x167xfree | AK-C-C50: 50x178xfree | AK-C-C51: 61x115xfree |
| AK-C-C52: 101x155xfree | AK-C-C53: 81x135xfree | AK-C-C54: 122x175xfree |
| AK-C-C55: 55x95xfree | AK-C-C56: 22x65.2xfree | AK-C-C57: 38x61xfree |
| AK-C-C58: 49x61xfree | AK-C-C59: 68x65xfree | AK-C-C60: 45x65xfree |
| AK-C-C61: 15.2x67.3xfree | AK-C-C62: 26x78xfree | |

Autre service de boîtier en aluminium personnalisé

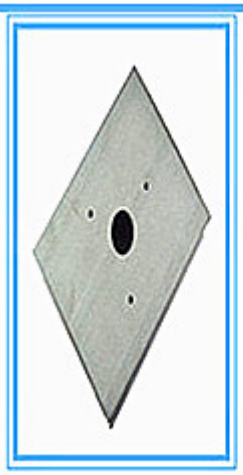

**SZOMK**

1.Customized Service: change length,change color,mill finish, powder coating, anodizing,cut holes.

2.MOQ: 20pieces

3.If you need these service,please let us know.

cutholes & silkscreen
bikeboard
bikeboard
REONIX
AUTOMATION
Alarm Callout Unit
REONIX
AUTOMATION
Alarm Callout Unit
bikeboard™
swiss engineered

STICKER AND SILICON SEAL
szomk.en.alibaba.com
CHIPTUNING-BOX
your tuning innovation
CHIP TUNINGMAX

Colors and length customized

国际标准认证证书
INTERNATIONAL STANDARD CERTIFICATION CERTIFICATE
质检中诚认证
Quality Testing CTC Certification

ISO 9001
The Certification Certificate
Of Quality Management System
Dongguan Dier'an Electronic Technology Co., Ltd.
Production and service of binding post
Guangdong Quality Testing CTC Certification Co., Ltd.

VDE Prüf- und Zertifizierungsinstitut
GUTACHTEN MIT FERTIGUNGSÜBERWACHUNG
CERTIFICATE OF CONFORMITY WITH FACTORY SURVEILLANCE
VDE

Bienvenue à nous contacter pour plus de détails de boîtier en aluminium extrudé, votre demande sera sûrement obtenir des réponses rapides en 24 heures!

## Company Information

**Shenzhen Futian Huaqiang Electronic World OMK Electronic Sales Departmen**

This complex,during long years of efforts with it's own experienced group and sole facilities for improvement of productions and promotion of products quality, is now one of the largest suppliers of all kinds of metallic and plastic enclosures in different fields of electronic,electrical,communication,medical,industrial and research prtojects purposes.

In today's industrial world and with the rapid development of all industries,the need of these products is sensed more than ever.Therefore by offering the best quality and service,we try to meet these needs and help you to reach your ideals.

## Factory and showroom

## Exhibition

## Certificate

## Packaging & Shipping

SZOMK

Shenzhen Futian Huaqiang Electronic World OMK
Electronic Sales Department

Tel: +86-755-83222882 E-mail: ivy@szomk.com.cn

AliExpress

HOME