Caractéristiques:

Lieu d'origine: Shenzhen, Chine

Type: électronique petite boîte de jonction boîtier en plastique

N ° de modèle: AK-S-103

Taille: 81 * 41 * 51 mm

Matériel: plastique abs

Échantillon MOQ: 1 pièce

Personnaliséun service: découpe, sérigraphie, couleur, autocollant, gravure laser, feuille acrylique, créer un moule

Personnalisé MOQ: 20 pcs

Emballage: carton

SZOMK

Enclosure Manufacturer

www.chinaenclosure.com

SZOMK

Customizable
cutout, sticker
silkscreen, color

Weight: 20g
Model No.AK-S-103

Size: 3.19*1.61*0.59 inch
81*41*15 mm

SZOMK

SZOMK

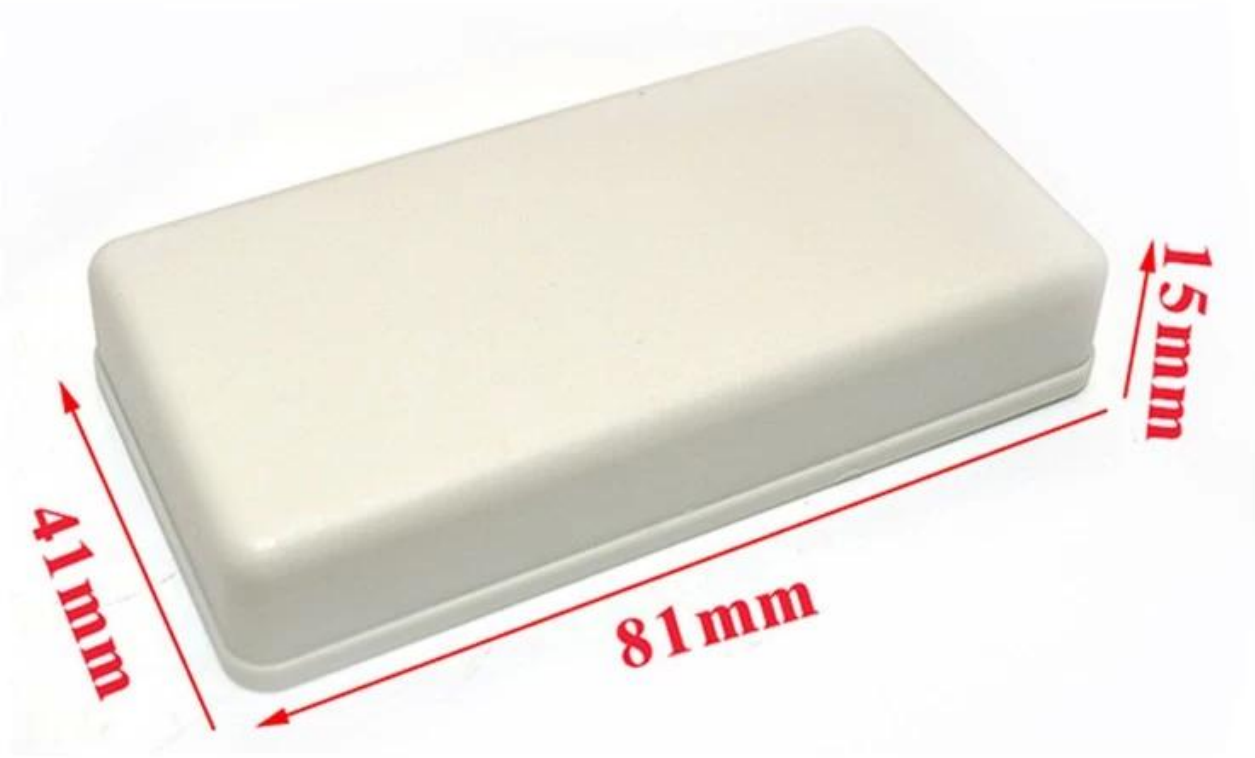

SZOMK

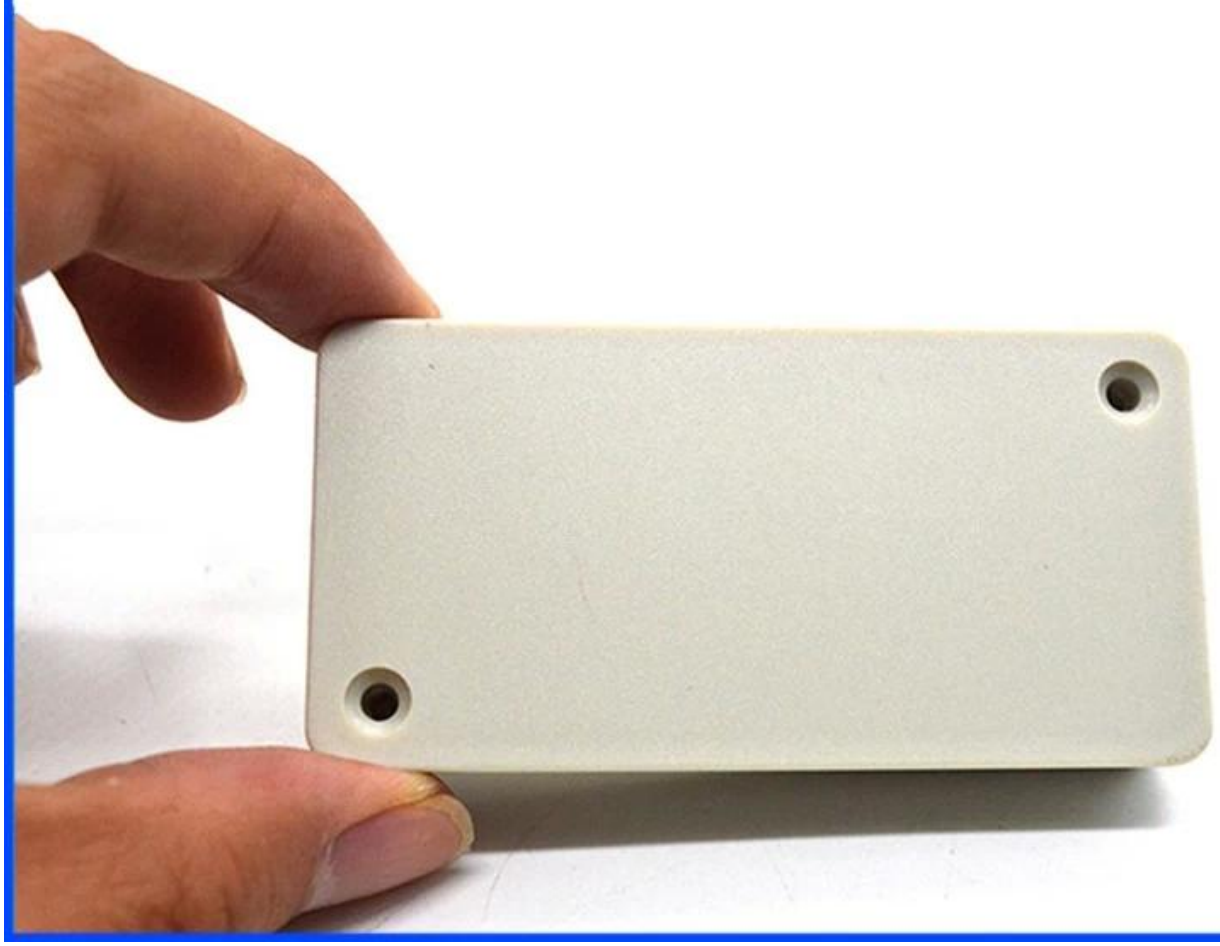

SZOMK

SZOMK

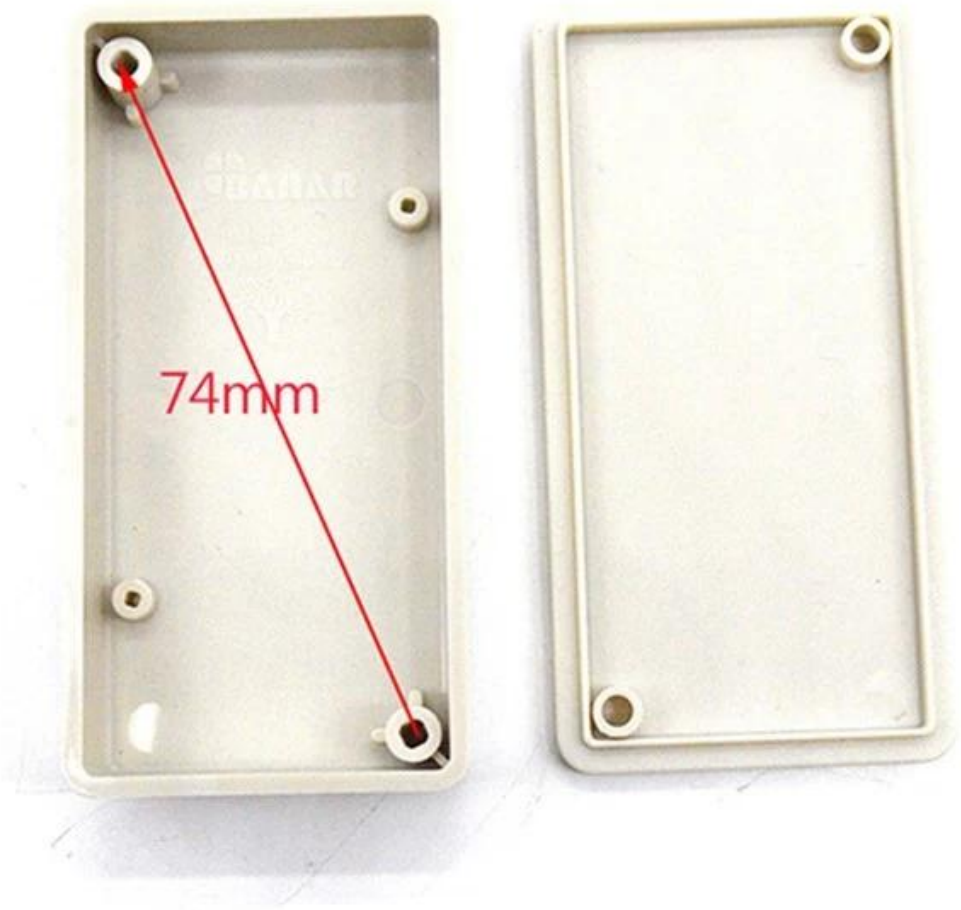

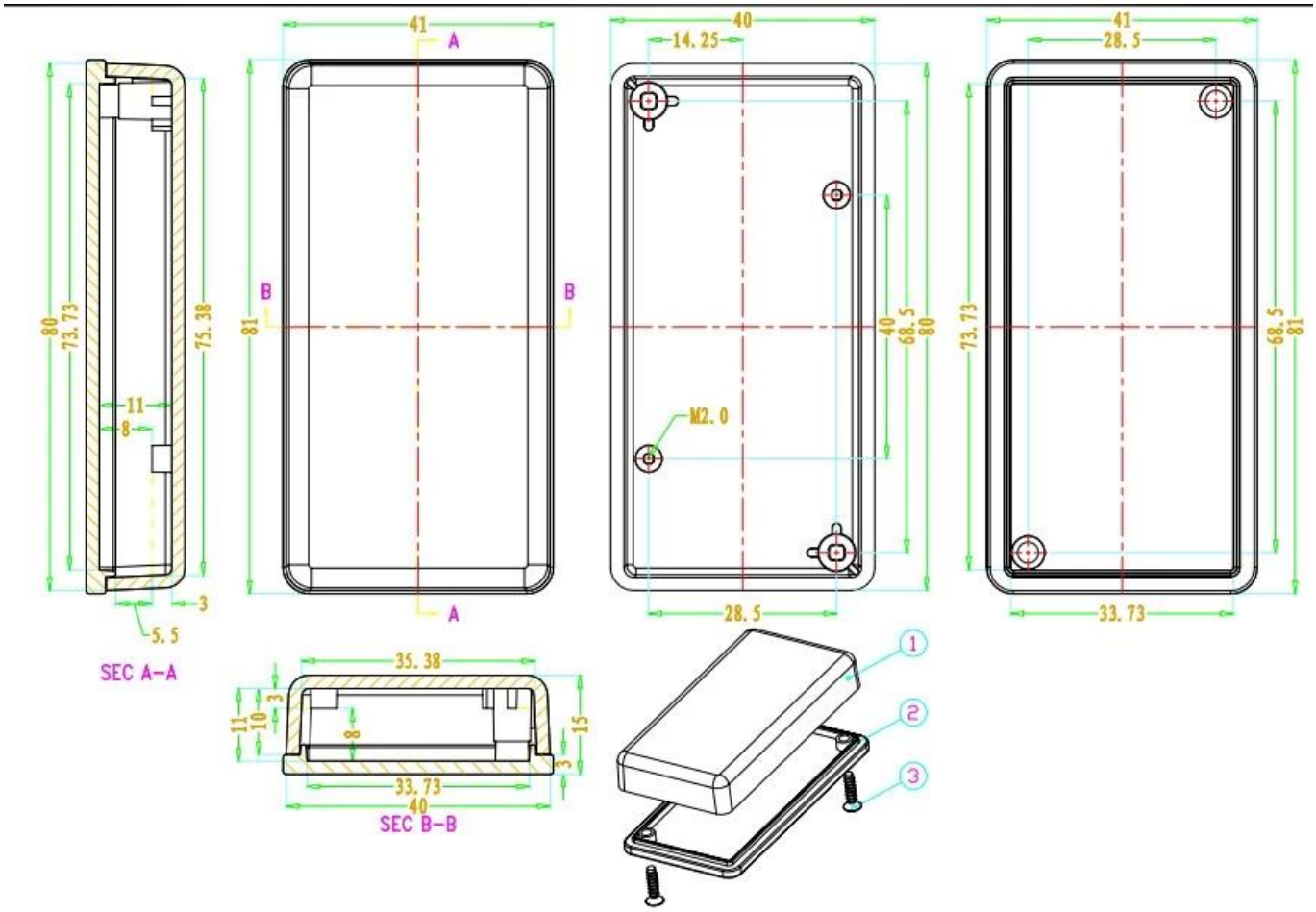

Voici notre service personnalisé:

1, changer la longueur de l'aluminium 2, changez la couleur de nos boîtes

3, produit de polissage 4, revêtement en poudre

5, huile brossée 6, découpe

7, gravure au laser 8, étiquette PVC

9, plaque acrylique 10, sérigraphie

11, faire l'autocollant 12, bords de gel de silice

13, sablage 14, tréfilage

15, protection UV 16, moule ouvert

What we can do (we can do customize)

1, change aluminum length

2, change color of our boxes

3, product polishing

4, powder coating

5, brushed oil

6, cut-out

7, lasder engraving

8, PVC label

9, Acrylic plate

10, silk screen printing

11, make sticker

12, silica gel edges

13, sandblasting

14, wire drawing

15, UV protection

Silkscreen
Plate
Sticker
We can do customize
Cutout
Silicone Seals
Color

We can do customize

Cut holes
Silkscreen
Sticker

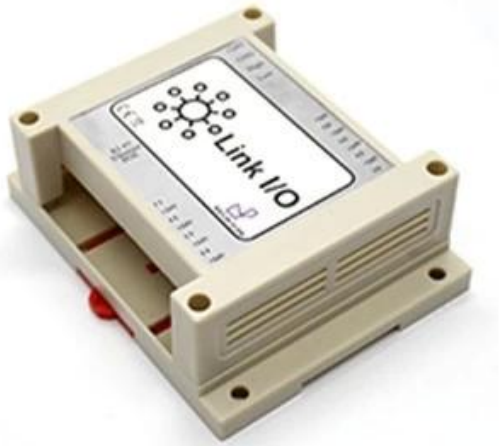

We can do customize

change the color	

We can do customize

PVC lable
Acrylic plate
Sticker

We can do customize

Cut holes
Silkscreen
Laser carve

We can do customize
UV
Protection

We can do customize

Cut holes
Silkscreen
Sticker

Utilisation:

Il est largement utilisé dans l'électronique, l'instrumentation, l'automatisation, la communication, les unités d'alimentation, les projets étudiants, les amplificateurs, les équipements médicaux, les équipements de test et de mesure, le contrôle industriel, les périphériques et les interfaces.

It is widely used in electronic, instrumentation, automation, communications, power supply units, student projects, amplifiers, Medical and wellness devices, test and measurement equipment, industrial control, peripheral devices and interfaces, switch boxes.

QQ 505924585

Tel 86-755-83222882
86-13028816914

Add 616Room,505 Building ,Shangbu industry, Hangtian road ,Futian district ,Shenzhen, China,518031

Email lily@szomk.net

skype szomk006

WhatsApp 86-13028816914

Contact us if you need to pay by Paypal, T/T, Western Union, Alipay, Cash, Wechat, or Trade Assurance. We will make proforma invoice for you.

For more quantity of our products, leave message or email

lily@szonk.net

for best shipping cost via DHL、Fedex.

ABOUT US

SHENZHEN OKM ELECTRONICS CO.,LTD is now one of the largest suppliers of all kinds of plastic and metallic enclosures in different fields of electronic,electrical,communication,medical,industrial and research projects purposes. We have more than 1000 moulds ,and we can do cutout,silkscreen ,label ,sticker ,laser carve and creat a new mould for you In today's industrial world and with the rapid development of all industries,the need of these products is sensed more than ever. Therefore by offering the best quality and service,we try to meet these needs and help you to reach your ideals.

GROUP PHOTO

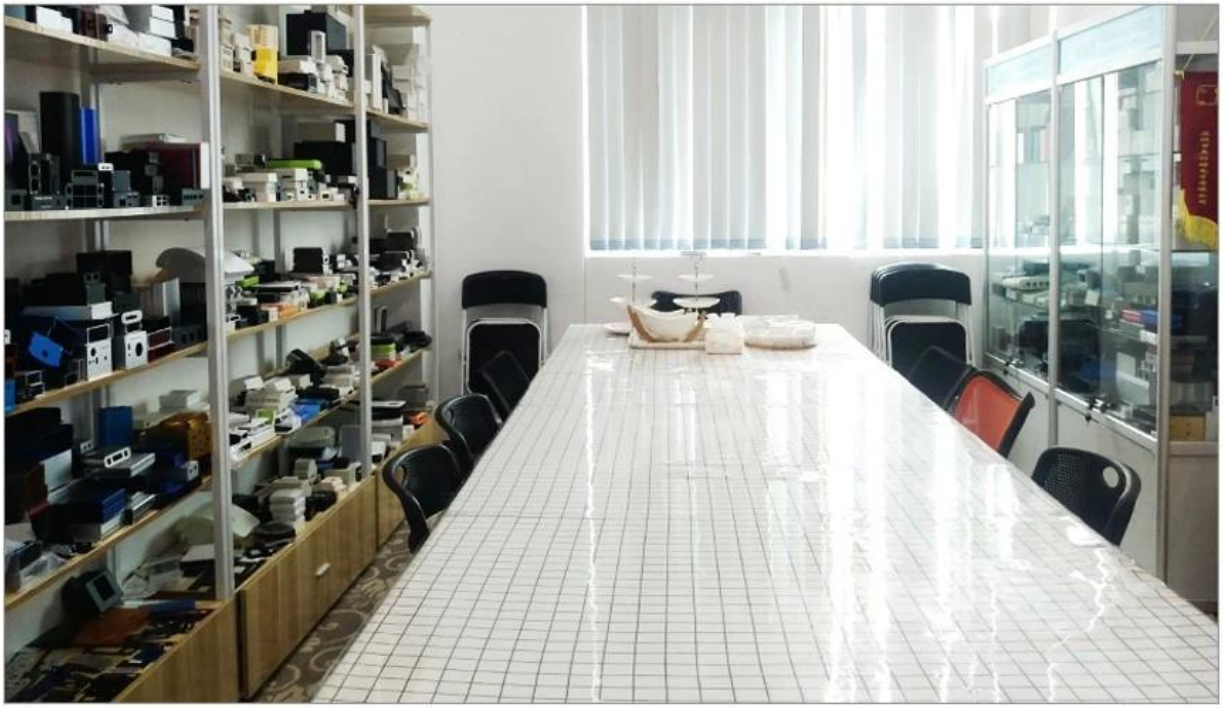

cutout, laser engrave, screen printing, sticker, acrylic plate, pvc label, color, silica gel rings, etc.

PACJAGUBG PROCESS

Toute enquête, s'il vous plaît contacter: teddy@szomk.net

Votre demande serait traitée dans les 24 heures. : o)