Description du produit:

1. Numéro de modèle: AK-S-01

2. Taille: 80x50x19mm

3. Couleur: A1, A2, A6, A8, A9, A11

4. Poids: 24g

SZOMK

Customizable
Cutout,sticker
Silkscreen,color

Model No. AK-S-01

Weight :24 g

Size: 3.15*1.97*0.75 inch
80*50*19 mm

Enclosure Manufacturer
www.chinaenclosure.com

SZOMK

Customizable
Cutout,sticker
Silkscreen,color

Model No. AK-S-01

Weight :24 g

Size: 3.15*1.97*0.75 inch
80*50*19 mm

Enclosure Manufacturer
www.chinaenclosure.com

SZOMK

Customizable
Cutout,sticker
Silkscreen,color

Model No. AK-S-01
Weight :24 g

Size: 3.15*1.97*0.75 inch
80*50*19 mm

Enclosure Manufacturer
www.chinaenclosure.com

SZOMK

Customizable
Cutout,sticker
Silkscreen,color

Model No. AK-S-01
Weight :24 g

Size: 3.15*1.97*0.75 inch
80*50*19 mm

Enclosure Manufacturer
www.chinaenclosure.com

SZOMK

Customizable
Cutout,sticker
Silkscreen,color

Model No. AK-S-01
Weight :24g

Size: 3.15*1.97*0.75 inch
80*50*19 mm

SZOMK

Customizable
Cutout,sticker
Silkscreen,color

Model No. AK-S-01
Weight :24 g

Size: 3.15*1.97*0.75 inch
80*50*19 mm

SZOMK
A6
A2
A1
A8
A9
A11

SZOMK

SZOMK
ABS

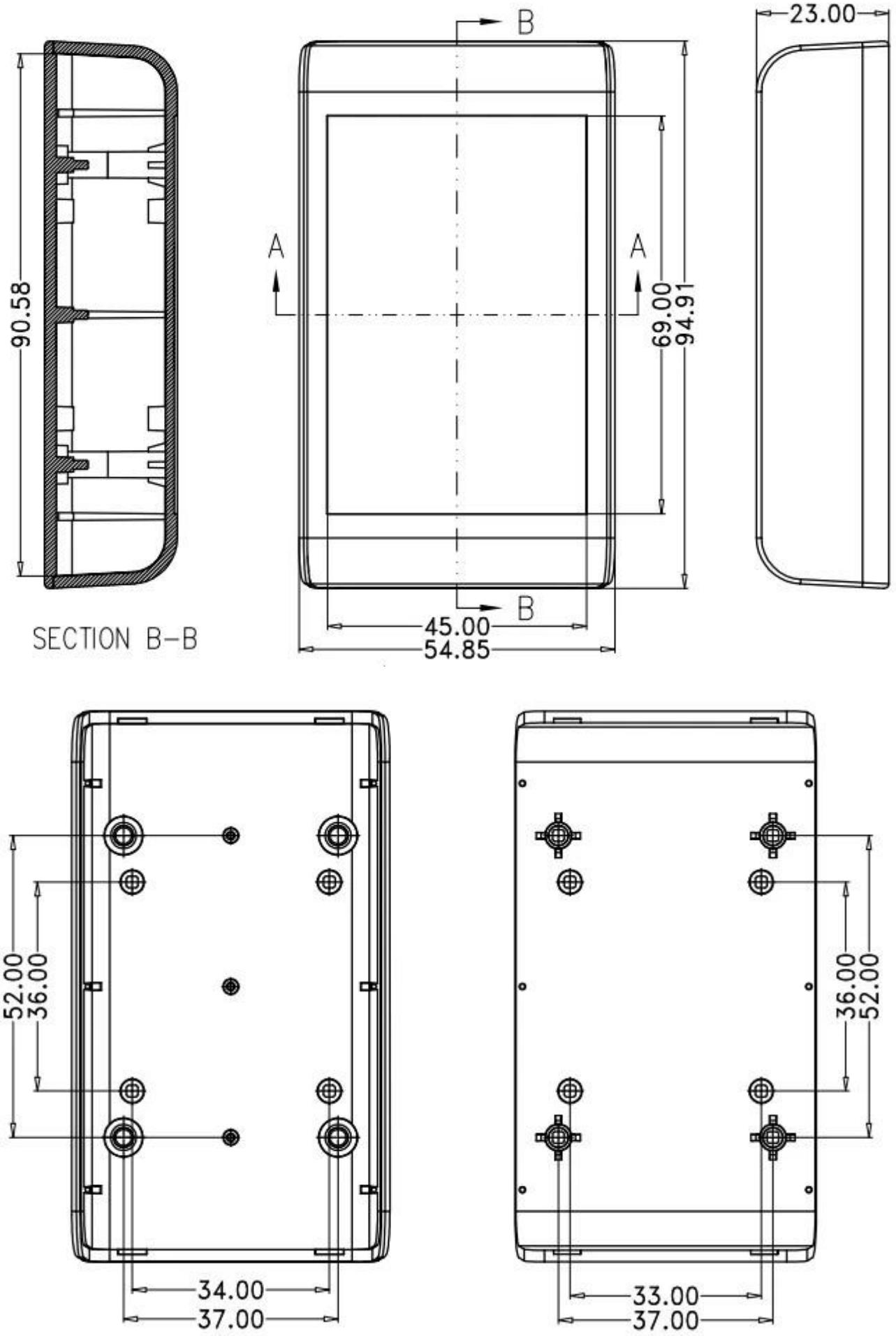
90.58
SECTION B-B
B
A
A
B
69.00
94.91
45.00
54.85
23.00
52.00
36.00
34.00
37.00
36.00
52.00
33.00
37.00

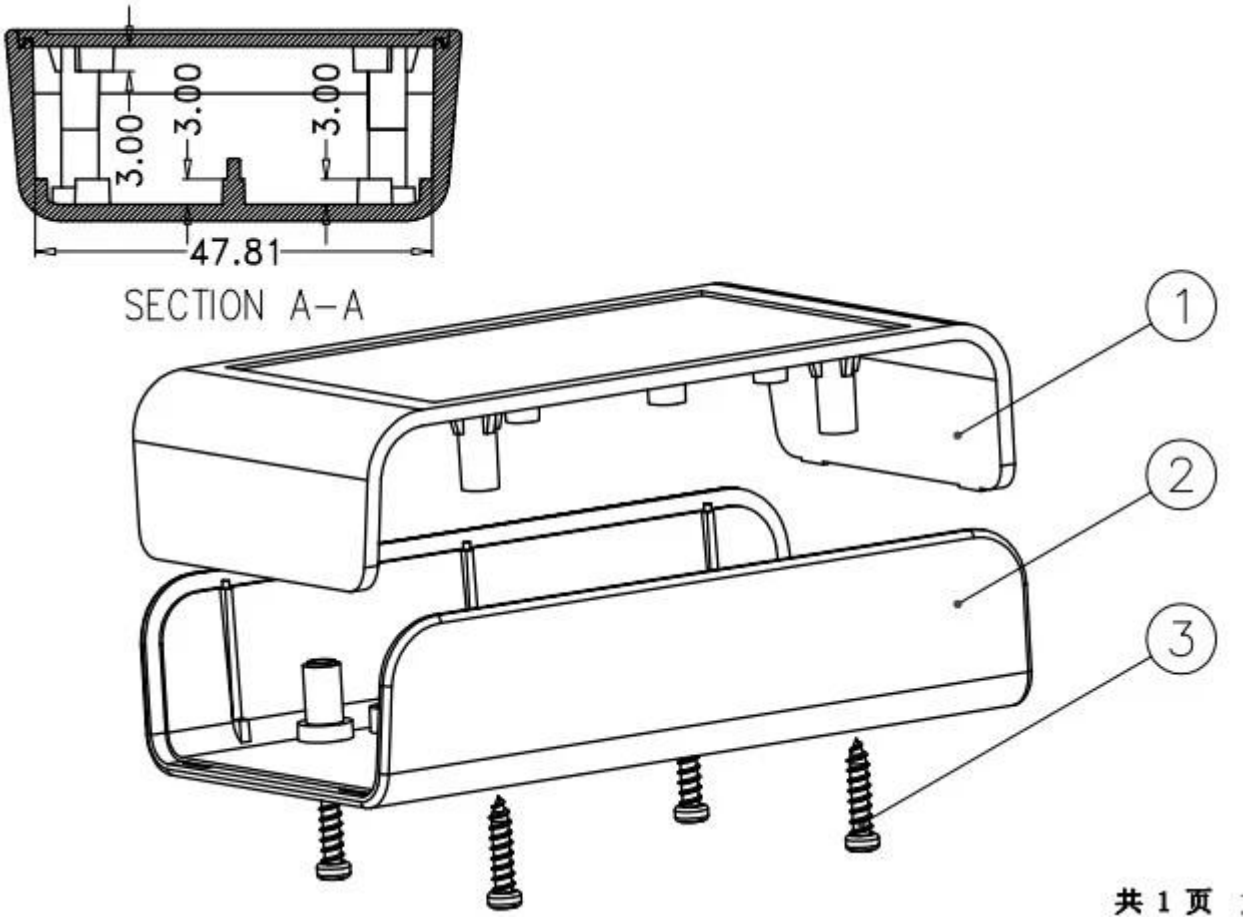

Notre service personnalisé:

1. Changer de longueur
2. Changer la couleur
3. polissage
4. Revêtement en poudre
5. Feuille d'aluminium brossée
6. Trous de forage
7. Gravure au laser
8. Étiquette PVC
9. plaque acrylique
10. Silk écran

Company Information

Shenzhen Futian Huaqiang Electronic World OMK Electronic Sales Departmen

This complex,during long years of efforts with it's own experienced group and sole facilities for improvement of productions and promotion of products quality, is now one of the largest suppliers of all kinds of metallic and plastic enclosures in different fields of electronic,electrical,communication,medical,industrial and research prtojects purposes.

In today's industrial world and with the rapid development of all industries,the need of these products is sensed more than ever.Therefore by offering the best quality and service,we try to meet these needs and help you to reach your ideals.

Exhibition

Certificate

Factory and showroom

Packaging & Shipping

TNT sure we can · UPS WE LOGISTICS · SF EXPRESS 顺丰速运 · FedEx Express · EMS · DHL

PayPal · WESTERN UNION · VISA · ESCROW · MasterCard · HSBC

SZOMK

Shenzhen Futian Huaqiang Electronic World OMK
Electronic Sales Department
Tel: +86-755-83222882 E-mail: ivy@szomk.com.cn

HOME