Détails rapides

Numéro de modèle: AK-DR-19
Taille externe: 200x90x70mm
Couleur blanche
Matériel: abs
Poids: 156g

SZOMK

Customizable
cutout, sticker
silkscreen, color

Weight: 155g
Model No.AK-DR-19

Size: 7.87*3.54*2.76 inch
200*90*70 mm

SZOMK

SZOMK

SZOMK

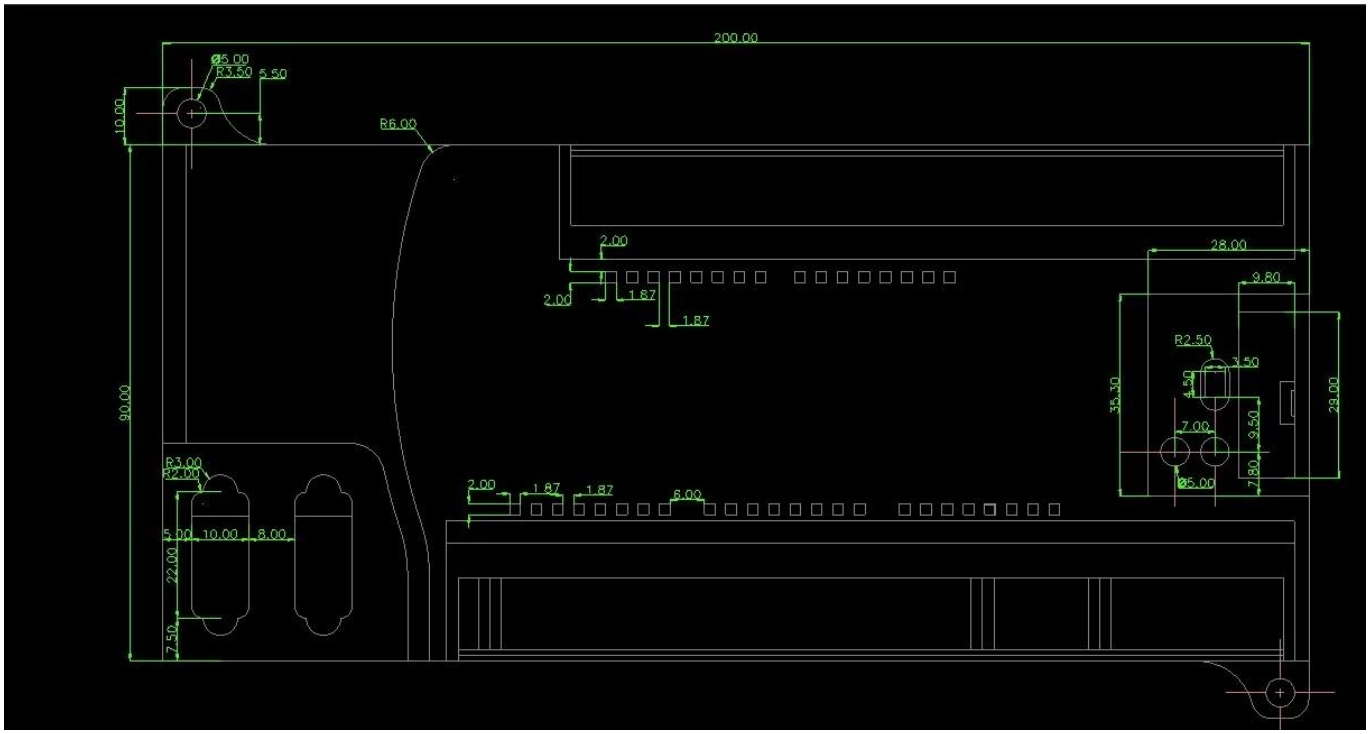
200.00
Ø5.00
R3.50
5.50
10.00
R6.00
2.00
2.00
1.87
1.87
28.00
9.80
R2.50
3.50
4.50
35.30
28.00
7.00
9.50
7.80
Ø5.00
90.00
R3.00
R2.00
2.00
1.87
1.87
6.00
5.00
10.00
8.00
22.00
7.50

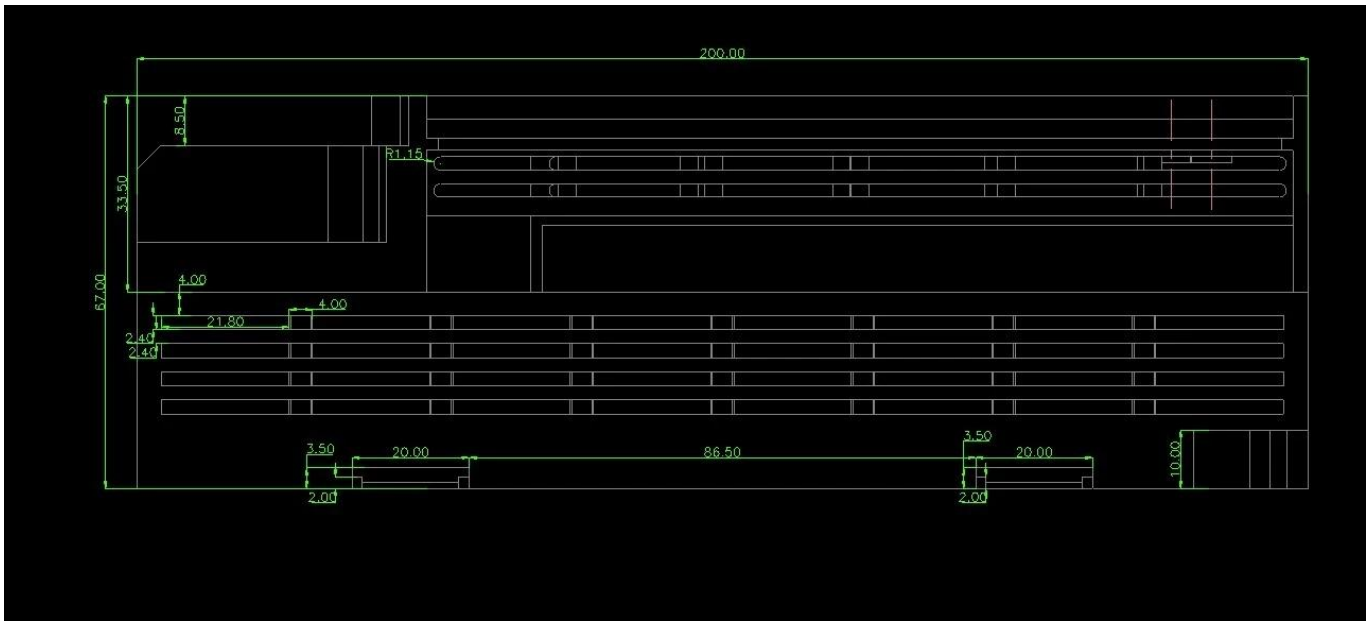
200.00
8.50
R1.15
33.50
67.00
4.00
4.00
21.80
2.40
2.40
3.50
20.00
86.50
3.50
20.00
2.00
2.00
10.00

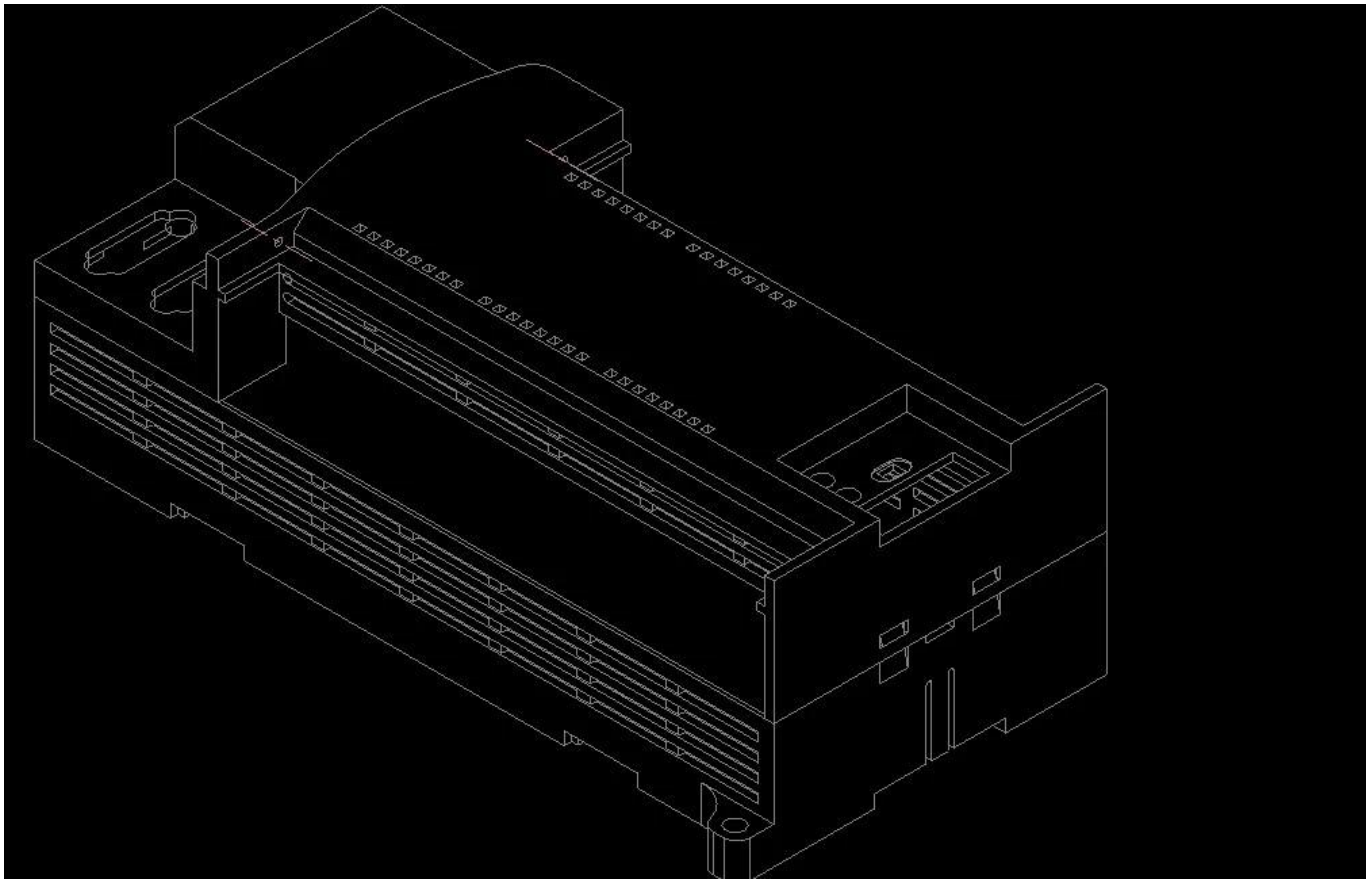

Company Information

Shenzhen Futian Huaqiang Electronic World OMK Electronic Sales Departmen

This complex,during long years of efforts with it's own experienced group and sole facilities for improvement of productions and promotion of products quality, is now one of the largest suppliers of all kinds of metallic and plastic enclosures in different fields of electronic,electrical,communication,medical,industrial and research prtojects purposes.

In today's industrial world and with the rapid development of all industries,the need of these products is sensed more than ever.Therefore by offering the best quality and service,we try to meet these needs and help you to reach your ideals.

Exhibition

Factory and showroom

Emballage & Livraison

Détails d'emballage: Carton standard d'exportation.
Détail de la livraison: 3-15days, quantité différente différente délai d'exécution.