Descrizione del prodotto:

1. Numero di modello: AK-S-47

2. Formato: 40x17x10mm 1.57x0.67x0.39inch

3. Colore: nero

4. Peso: 5g

5. Materiale: abs plastica

SZOMK
Customizable
Cutout,sticker
Silkscreen,color
size:1.57*0.67*0.39 inch
40*17*10 mm
Model No. AK-S-27
40
17
10
Weight: 5g

SZOMK
Customizable
Cutout,sticker
Silkscreen,color
size:1.57*0.67*0.39 inch
40*17*10 mm
Model No. AK-S-27
17
40
10
0 cm
1
2
3
4
Weight: 5g

SZOMK

Customizable
Cutout,sticker
Silkscreen,color

Model No. AK-S-27

Weight: 5g

size:1.57*0.67*0.39 inch
40*17*10 mm

SZOMK

Customizable
Cutout,sticker
Silkscreen,color

Model No. AK-S-27

Weight: 5g

size:1.57*0.67*0.39 inch
40*17*10 mm

SZOMK
17
16
13
37

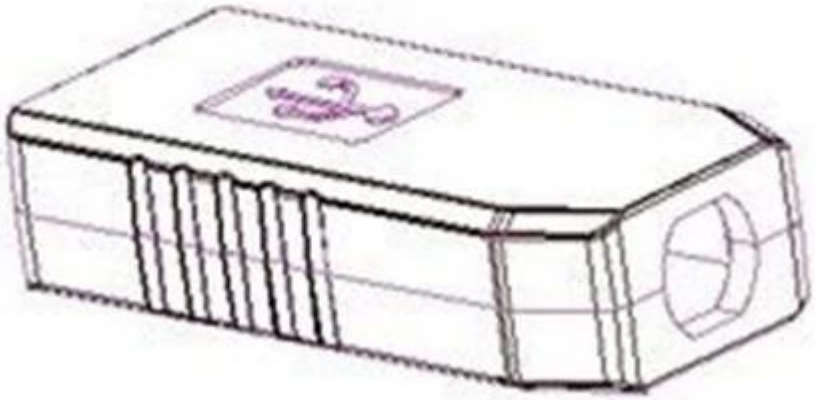

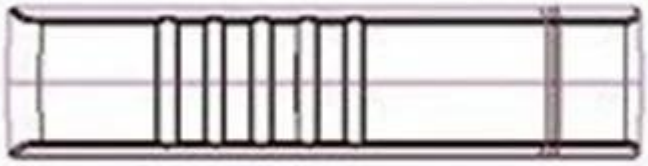

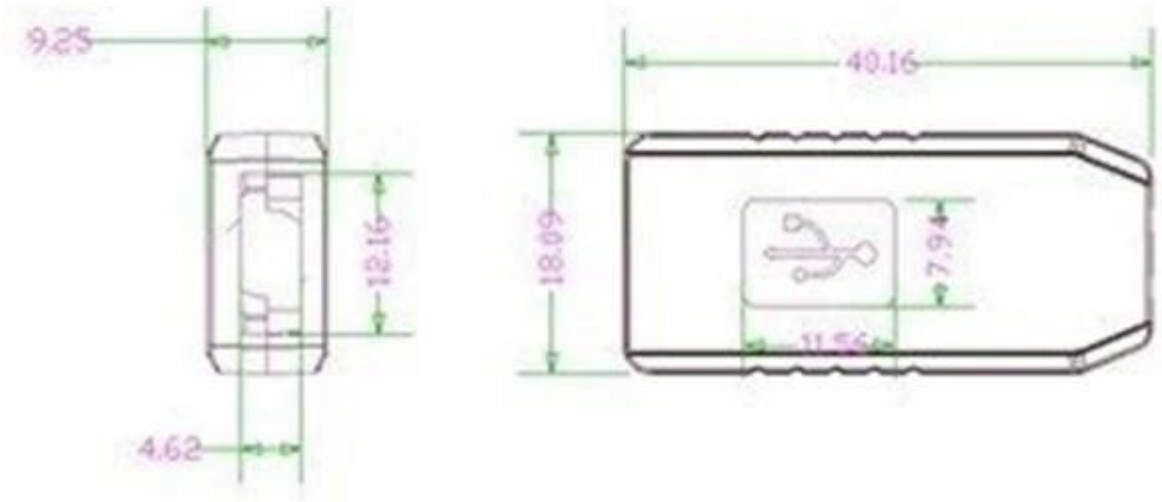
9.25
12.16
4.62
40.16
18.09
7.94
11.56

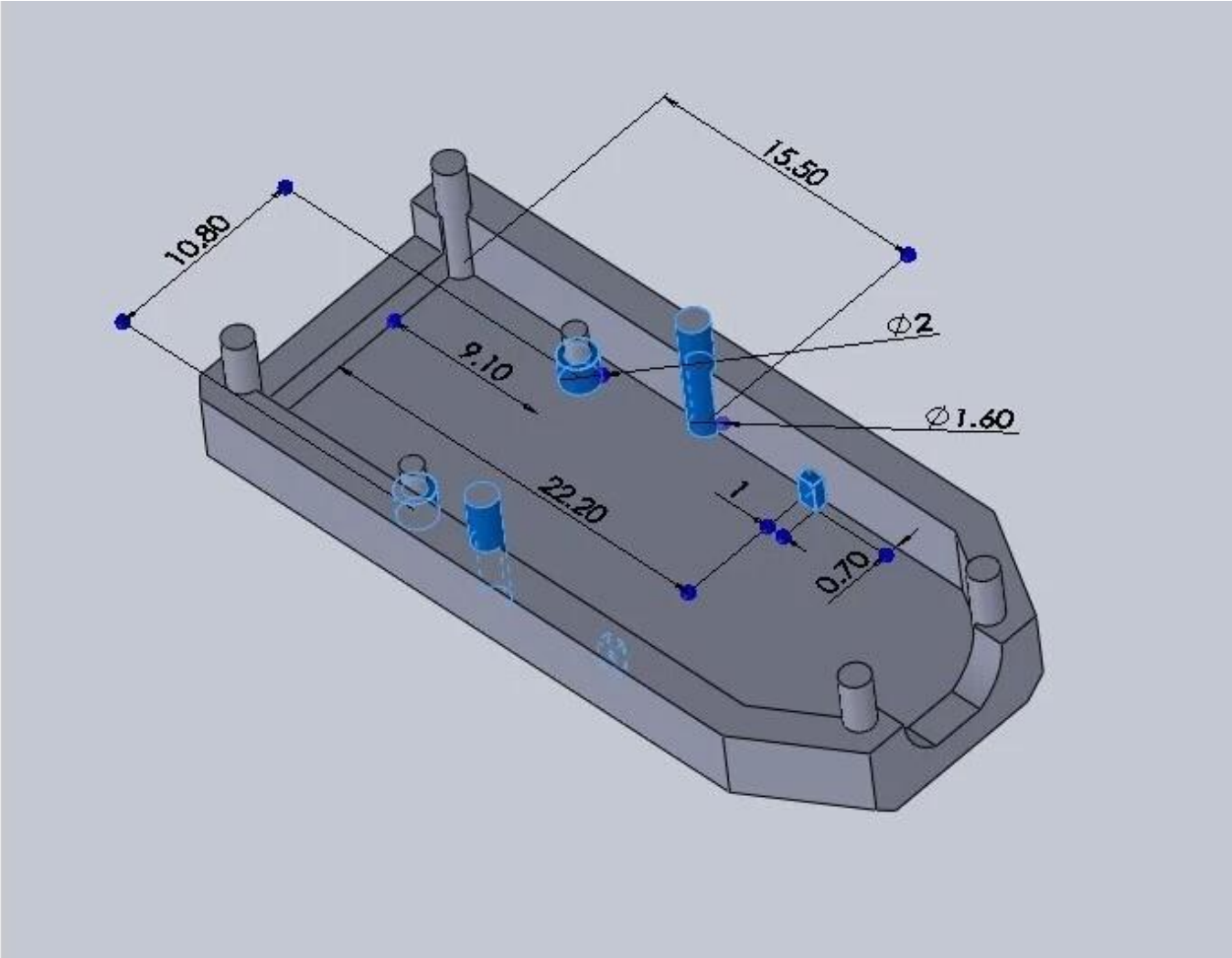

Il nostro servizio su misura:

Lunghezza 1.Cambia
Colore 2.MODIFICA
3.Polishing
Rivestimento 4.Powder
Foglio di alluminio 5.Brushed
Fori 6.Cut
7.Laser incisione
Etichetta 8.PVC
Piastra 9.Acrylic

Company Information

Shenzhen Futian Huaqiang Electronic World OMK Electronic Sales Departmen

This complex,during long years of efforts with it's own experienced group and sole facilities for improvement of productions and promotion of products quality, is now one of the largest suppliers of all kinds of metallic and plastic enclosures in different fields of electronic,electrical,communication,medical,industrial and research prtojects purposes.

In today's industrial world and with the rapid development of all industries,the need of these products is sensed more than ever.Therefore by offering the best quality and service,we try to meet these needs and help you to reach your ideals.

Exhibition

Certificate

Factory and showroom

Packaging & Shipping

TNT sure we can · UPS WE LOGISTICS · SF EXPRESS 顺丰速运 · FedEx Express · EMS · DHL

PayPal · WESTERN UNION · VISA · ESCROW · MasterCard · HSBC

SZOMK

Shenzhen Futian Huaqiang Electronic World OMK
Electronic Sales Department
Tel: +86-755-83222882 E-mail: ivy@szomk.com.cn

HOME