Descrizione del prodotto:

1. Numero di modello: AK-S-05
2. Formato: 145x85x40mm
3. Colore: Nero / Bianco
4. Peso: 99g

SZOMK
Customizable
Cutout,sticker
Silkscreen,color
145
40
85
A2
Weight :99 g
Model No. AK-S-05
145*85*40 mm
Size:5.71*3.35*1.57 inch

SZOMK

Customizable
Cutout,sticker
Silkscreen,color

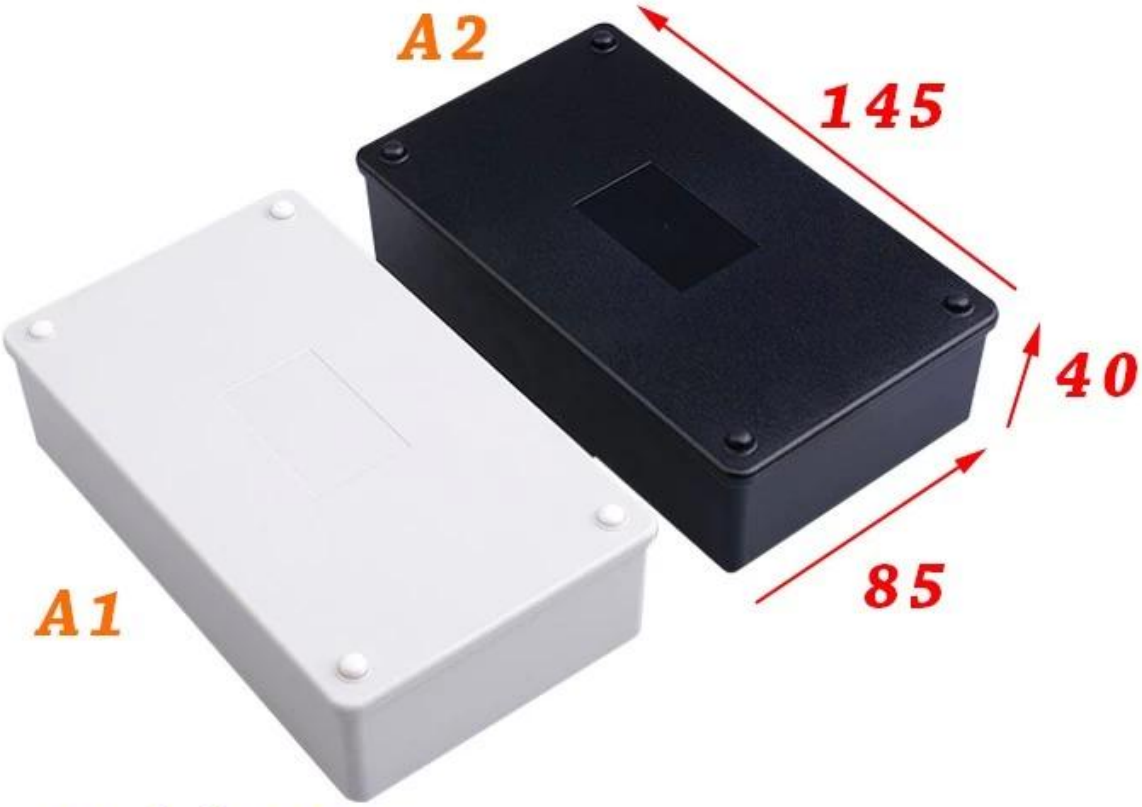

Weight :99 g

Model No. AK-S-05

145*85*40 mm
Size:5.71*3.35*1.57 inch

SZOMK

SZOMK

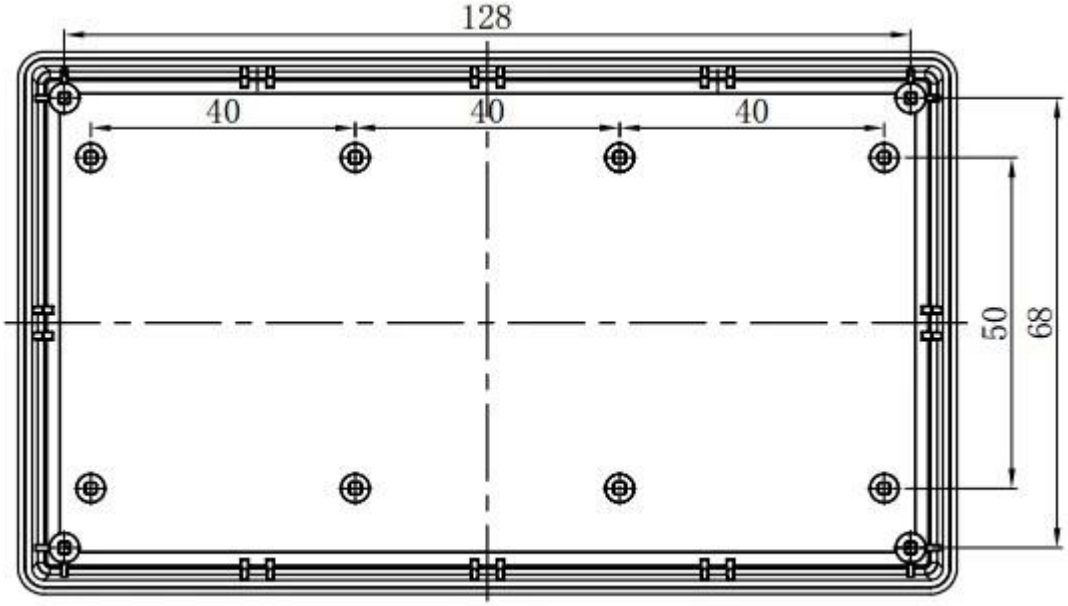
128
40
40
40
50
68

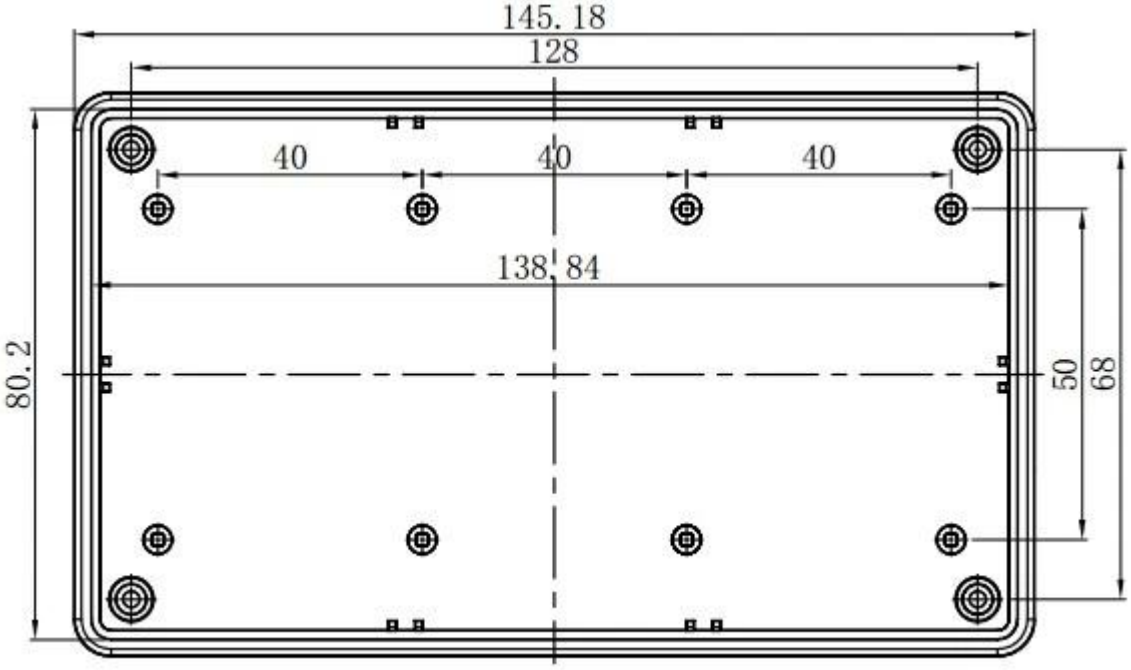
145.18
128
40
40
40
138.84
80.2
50
68

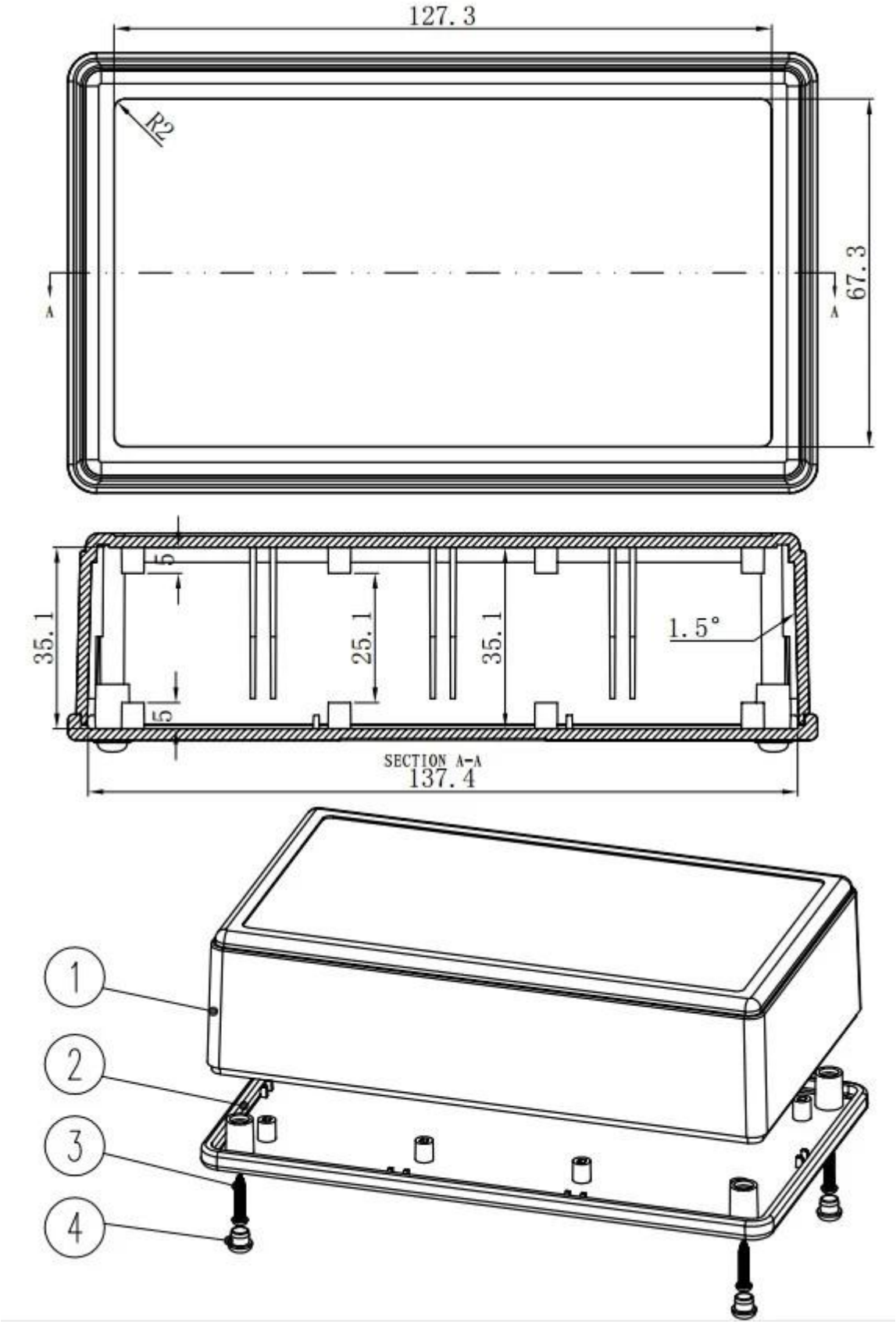

Il nostro servizio di personalizzazione:

1. Cambiare la lunghezza
2. Cambia Colore

3. lucidatura
Rivestimento 4. polvere
5. foglio di alluminio spazzolato
6. fori
7. incisione laser
8. etichetta PVC
Piastra 9.Acrylic
Schermo 10.Silk

Benvenuti a contattarci se avete qualsiasi domanda sul nostro recinto, la tua richiesta sarà reponsed con 24 ore!

Se avete bisogno di cataloghi o qualsiasi informazione dettagliata del nostro recinto, non esitate a farmi sapere:-)

QQ 505924585

Tel 86-755-8222882
86-13028816914

Add 628Room,505 Building ,Shangbu iddustry, Hangtian toad ,Futian district ,Shenzhen, China,518031

Email lily@szomk.net

Home http://www.aliexpress.com/store/1006252

skype szomk006

Company Information

Shenzhen Futian Huaqiang Electronic World OMK Electronic Sales Departmen

This complex,during long years of efforts with it's own experienced group and sole facilities for improvement of productions and promotion of products quality, is now one of the largest suppliers of all kinds of metallic and plastic enclosures in different fields of electronic,electrical,communication,medical,industrial and research prtojects purposes.

In today's industrial world and with the rapid development of all industries,the need of these products is sensed more than ever.Therefore by offering the best quality and service,we try to meet these needs and help you to reach your ideals.

Exhibition

Certificate

Factory and showroom

Packaging & Shipping

TNT sure we can · UPS WE LOGISTICS · SF EXPRESS 顺丰速运 · FedEx Express · EMS · DHL

PayPal · WESTERN UNION · VISA · ESCROW · MasterCard · HSBC

SZOMK

Shenzhen Futian Huaqiang Electronic World OMK
Electronic Sales Department
Tel: +86-755-83222882 E-mail: ivy@szomk.com.cn

HOME

Grazie per il tuo tempo! Benvenuti a visitare di nuovo. :-)