[illegible]

1.[illegible]
[illegible]
3.[illegible]
4.[illegible]
5.[illegible]
6.[illegible]
7.[illegible]
8. PVC[illegible]
9.[illegible]
10.[illegible]

[illegible]

[illegible]

[illegible]

[illegible]24[illegible].-[illegible]

SZOMK

Customizable
Cutout,sticker
Silkscreen,color

Weight :423 g
Model No. AK-H-04

Size:9.37*5.28*2.24 inch
238*134*57 mm

SZOMK

SZOMK

SZOMK

SZOMK

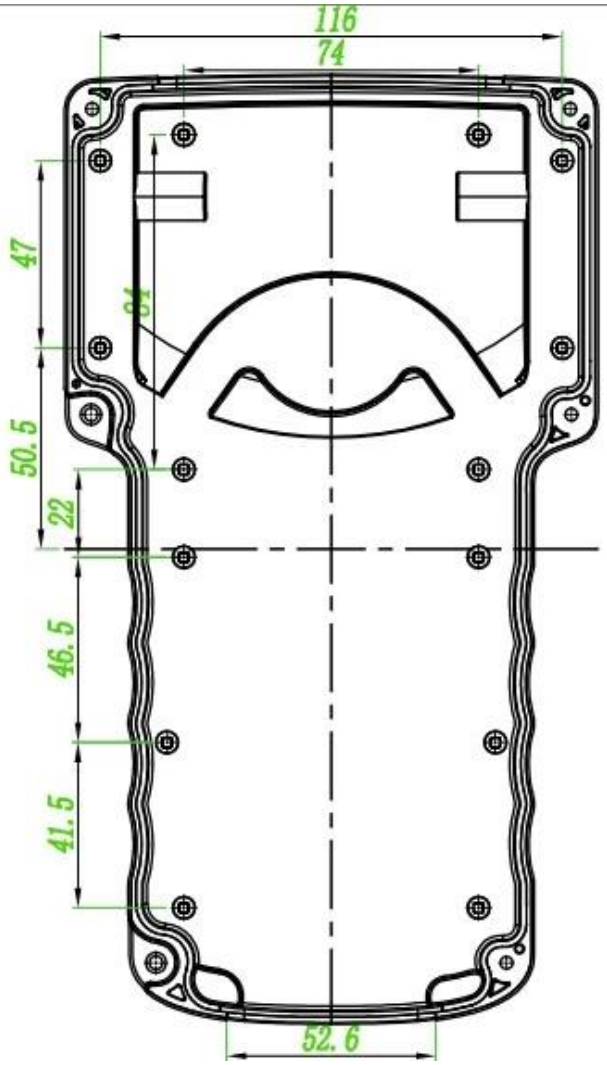
116
74
47
50.5
22
46.5
41.5
52.6

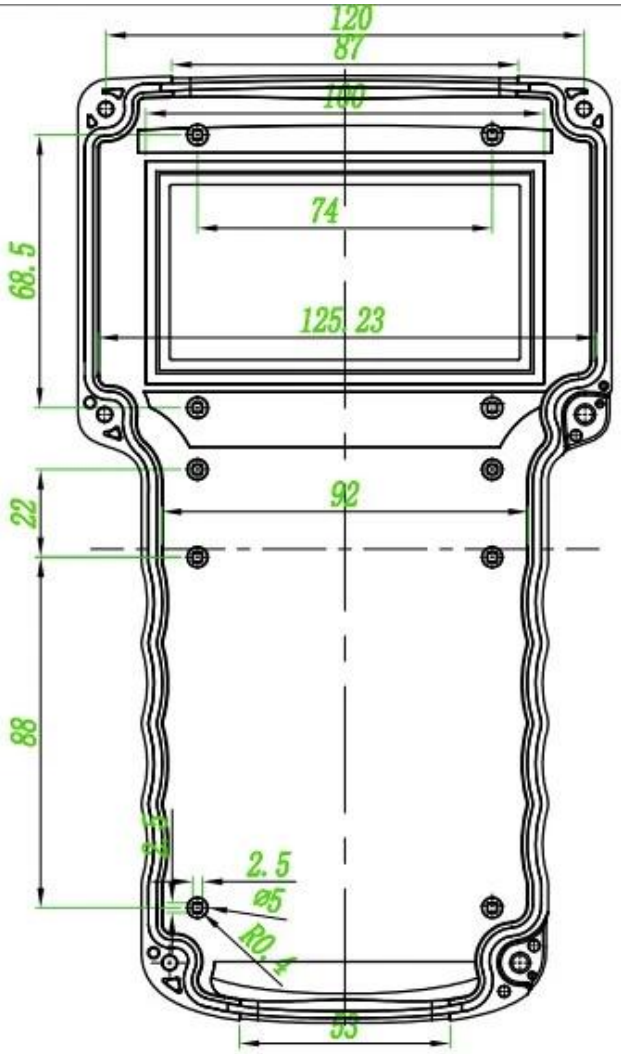
120
87
100
74
68.5
125.23
22
92
88
2.5
Ø5
R0.4
95

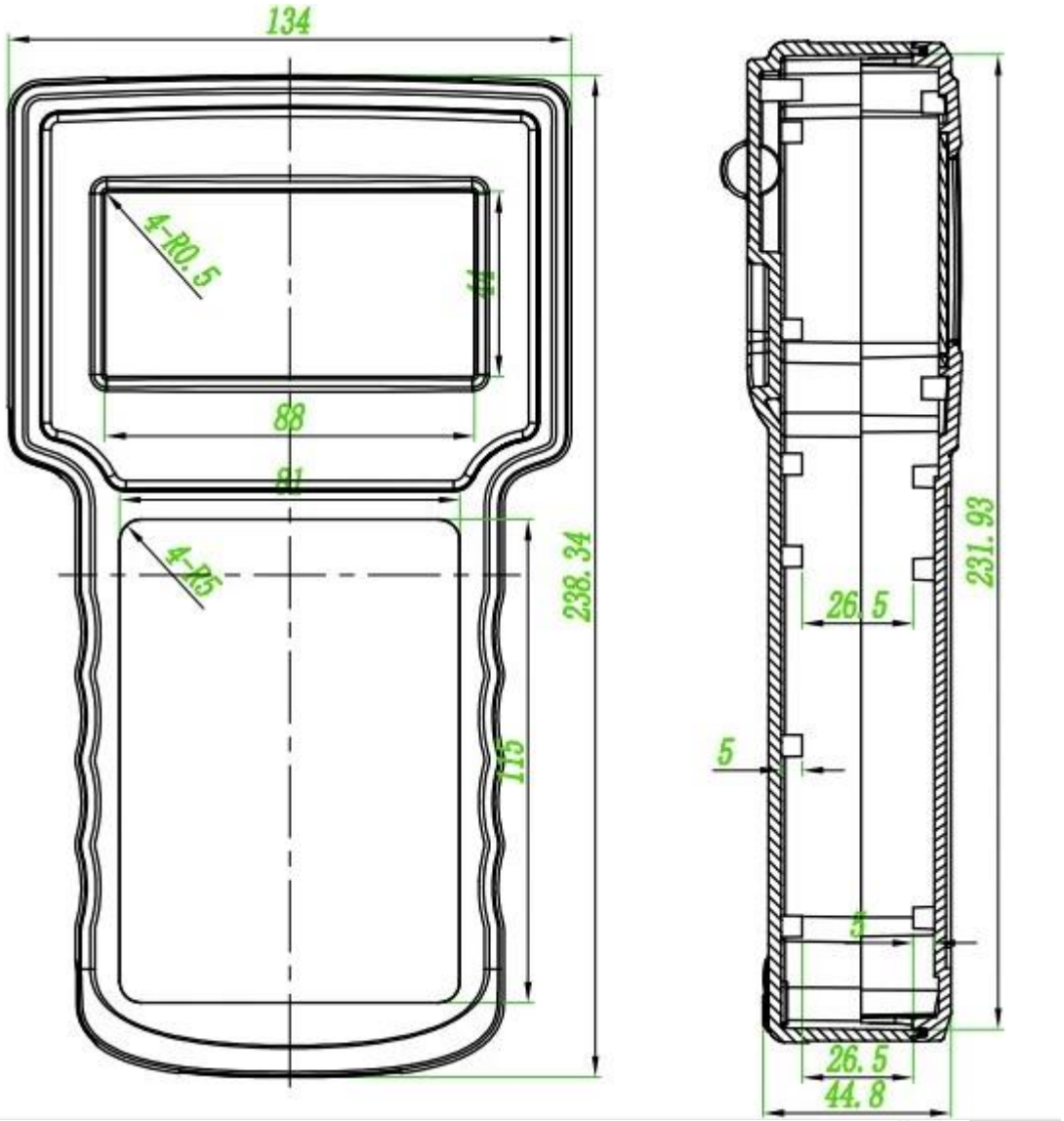
134
4-R0.5
88
81
4-R5
238.34
115
231.93
26.5
5
26.5
44.8

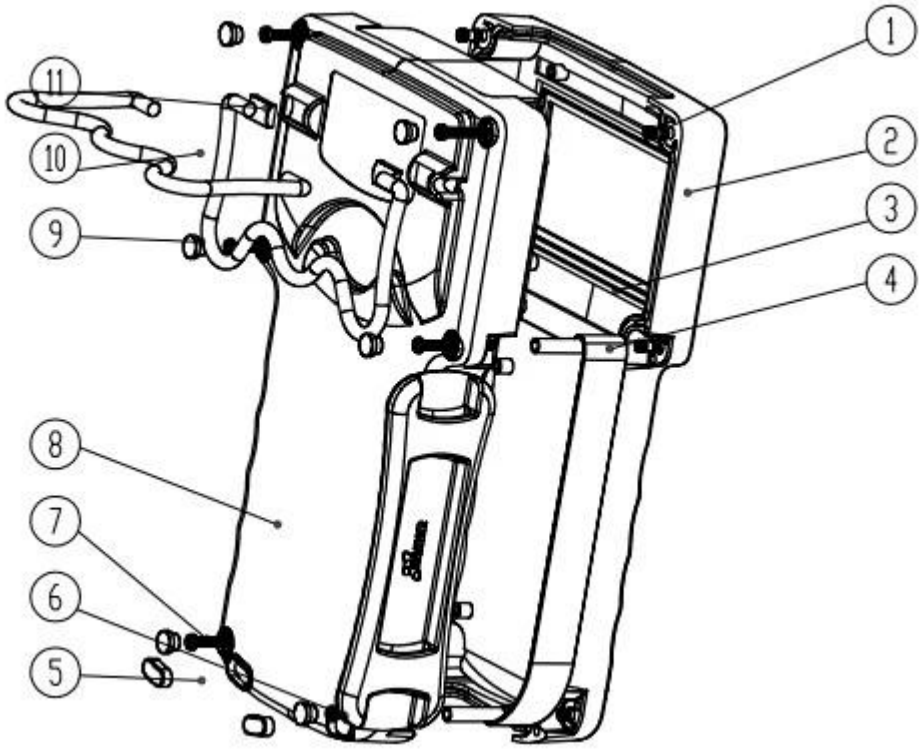
1
2
3
4
5
6
7
8
9
10
11