[illegible]

1.[illegible]
2.[illegible]
3.[illegible]
[illegible]
5.[illegible]
6.[illegible]
7.[illegible]
PVC[illegible]
[illegible]
10.[illegible]

[illegible]

[illegible]

[illegible]

[illegible]24[illegible] :-)

SZOMK
Customizable
Cutout,sticker
Silkscreen,color
85
A2
35
55
Weight :41 g
Model No. AK-S-09
85*55*35 mm
Size:3.35*2.17*1.38 inch

SZOMK

SZOMK

SZOMK

SZOMK

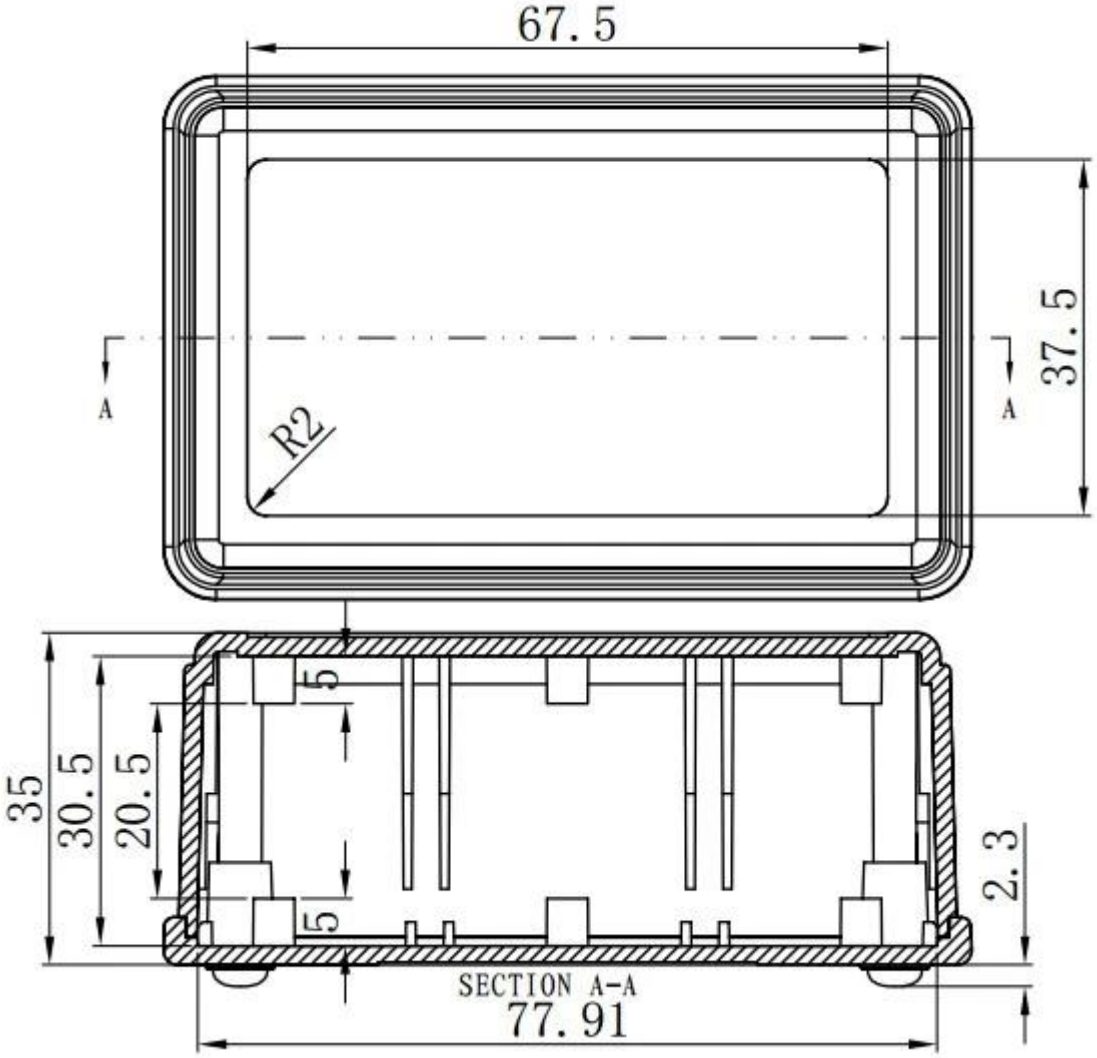
67.5
37.5
A
A
R2
35
30.5
20.5
5
5
2.3
SECTION A-A
77.91

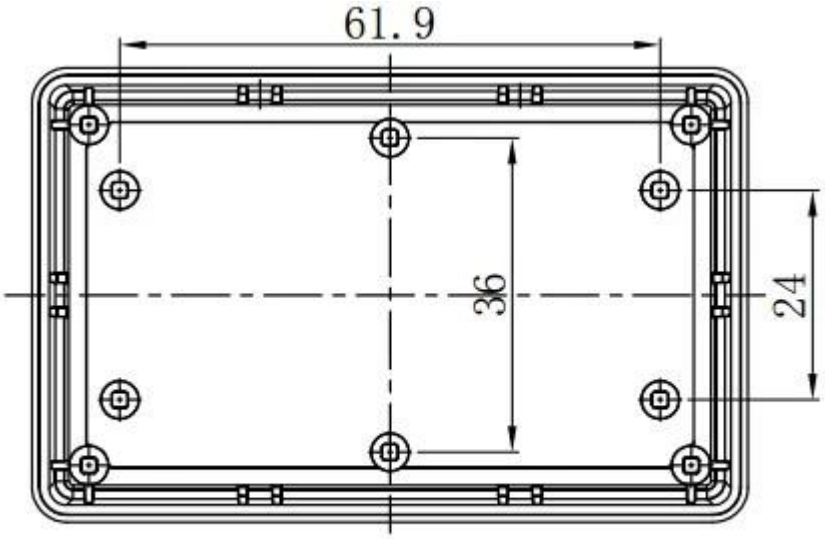
61.9
36
24

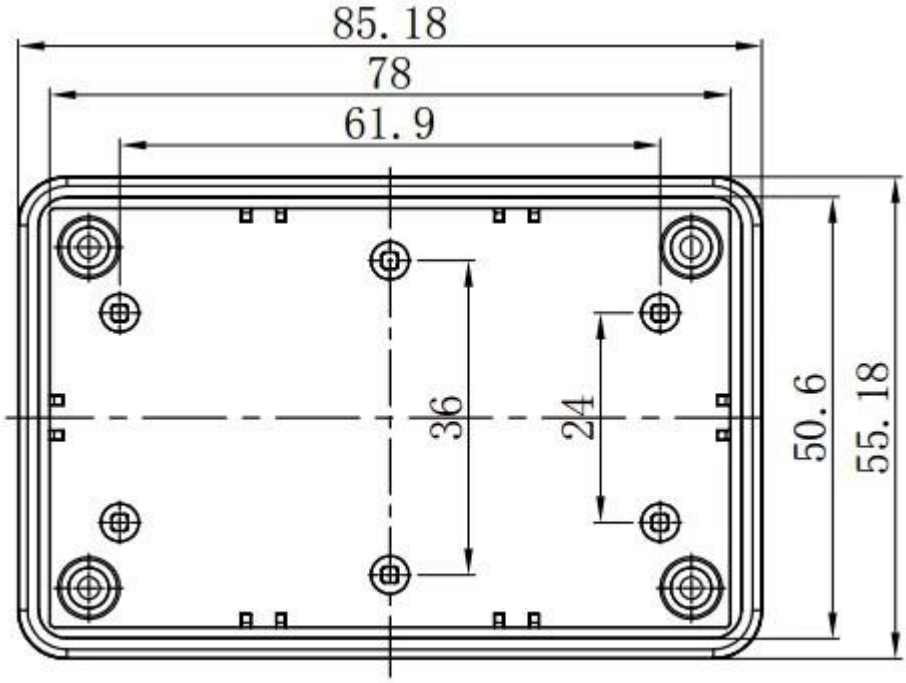
85.18
78
61.9
36
24
50.6
55.18

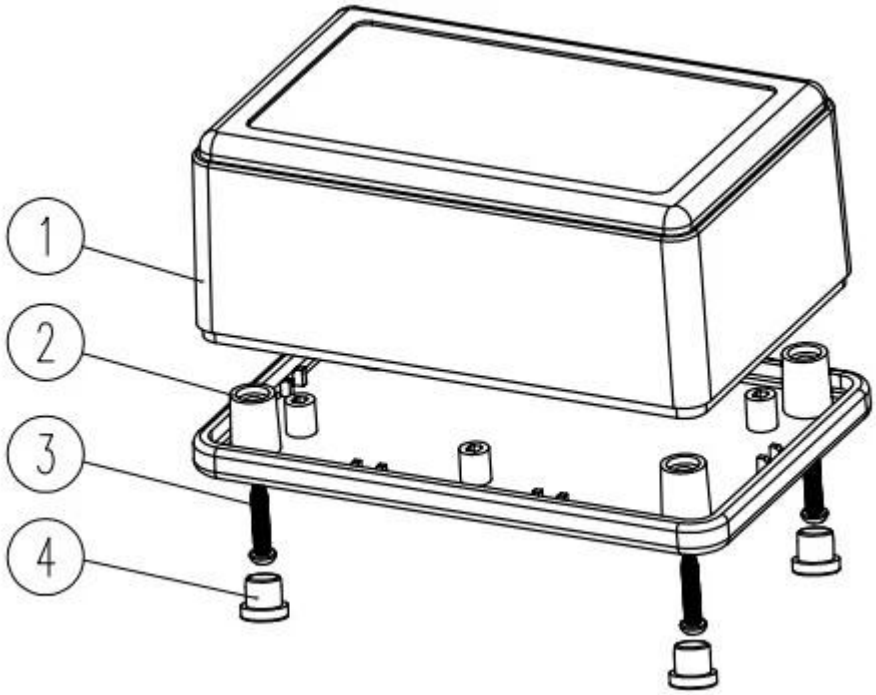
1
2
3
4

QQ 3010748891

Tel 81-755-83222882
+86 18819073301

Add 16-6Floor, 505Building ,Shangbu Industry Area,Hangtian RD,Futian District ,Shenzhen China

Email smile@szomk.net

skype szomk017