## [illegible]

1.[illegible]
2.[illegible]
3.[illegible]
4.[illegible]
5.[illegible]
6.[illegible]
7.[illegible]
8. PVC[illegible]
9.[illegible]
10.[illegible]

## [illegible]

[illegible]

## [illegible]

[illegible]24[illegible] :-)

SZOMK

**Customizable**
**Cutout,sticker**
**Silkscreen,color**

**Weight :259 g** **Size :8.27*4.92*1.85 inch**
**Model No.AK-H-55** **210*125*47 mm**

SZOMK

SZOMK

SZOMK

SZOMK

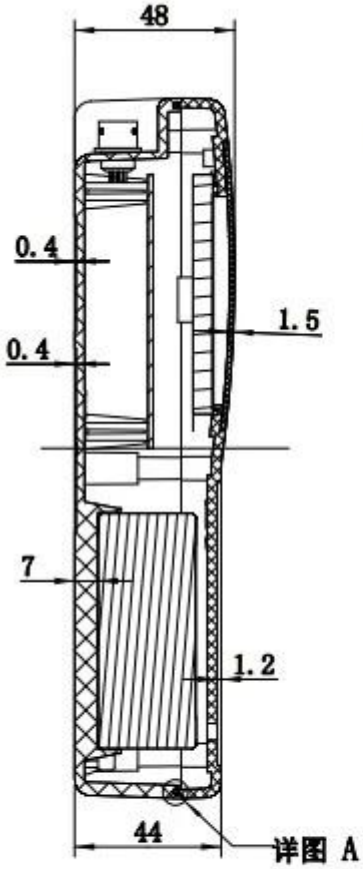


截面
A-A

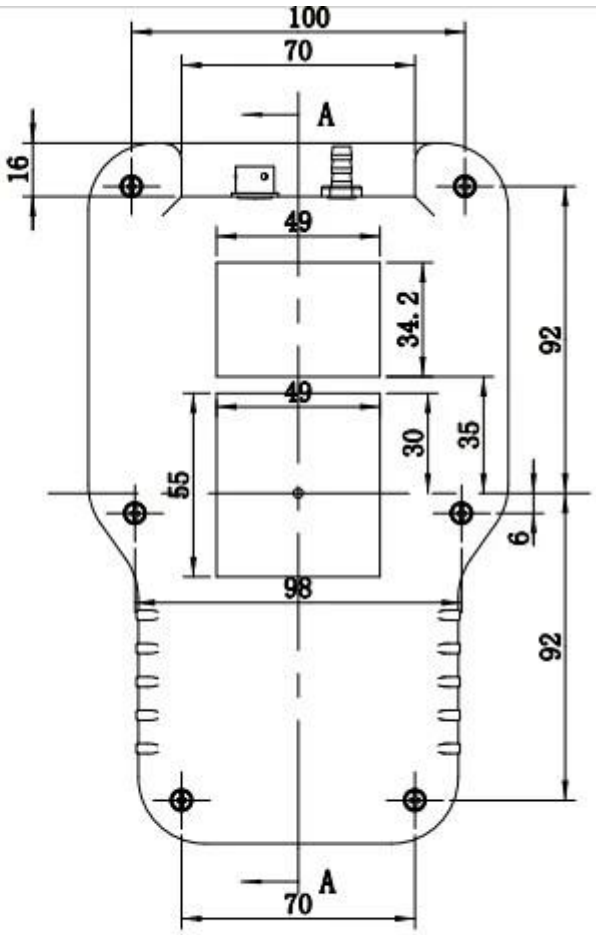


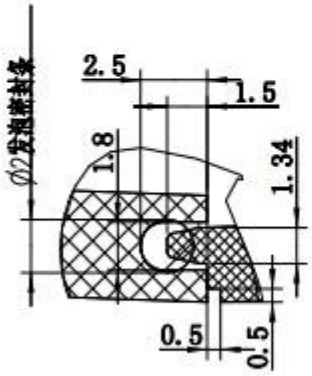


细节 A
比例 4:1

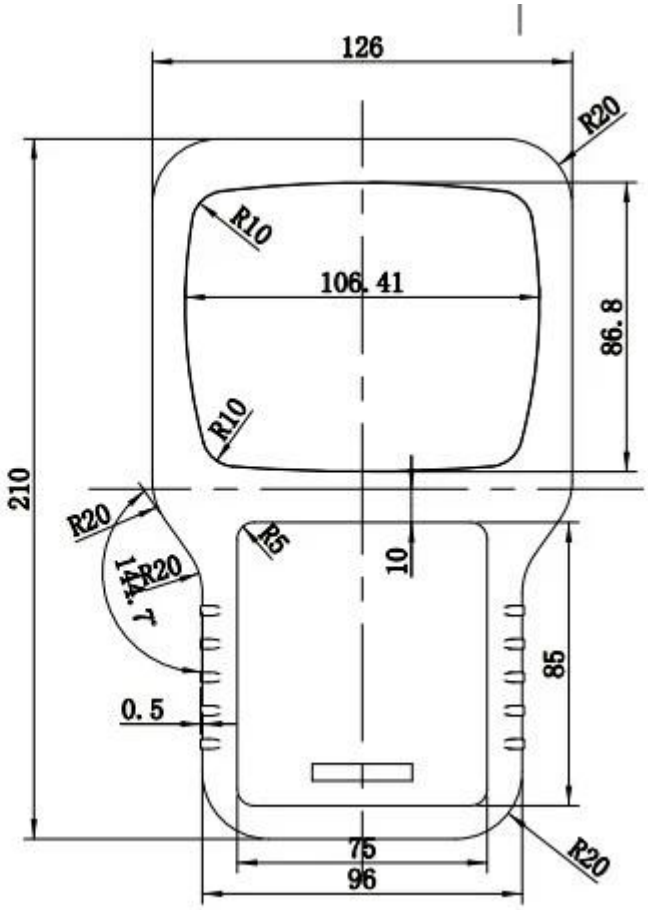

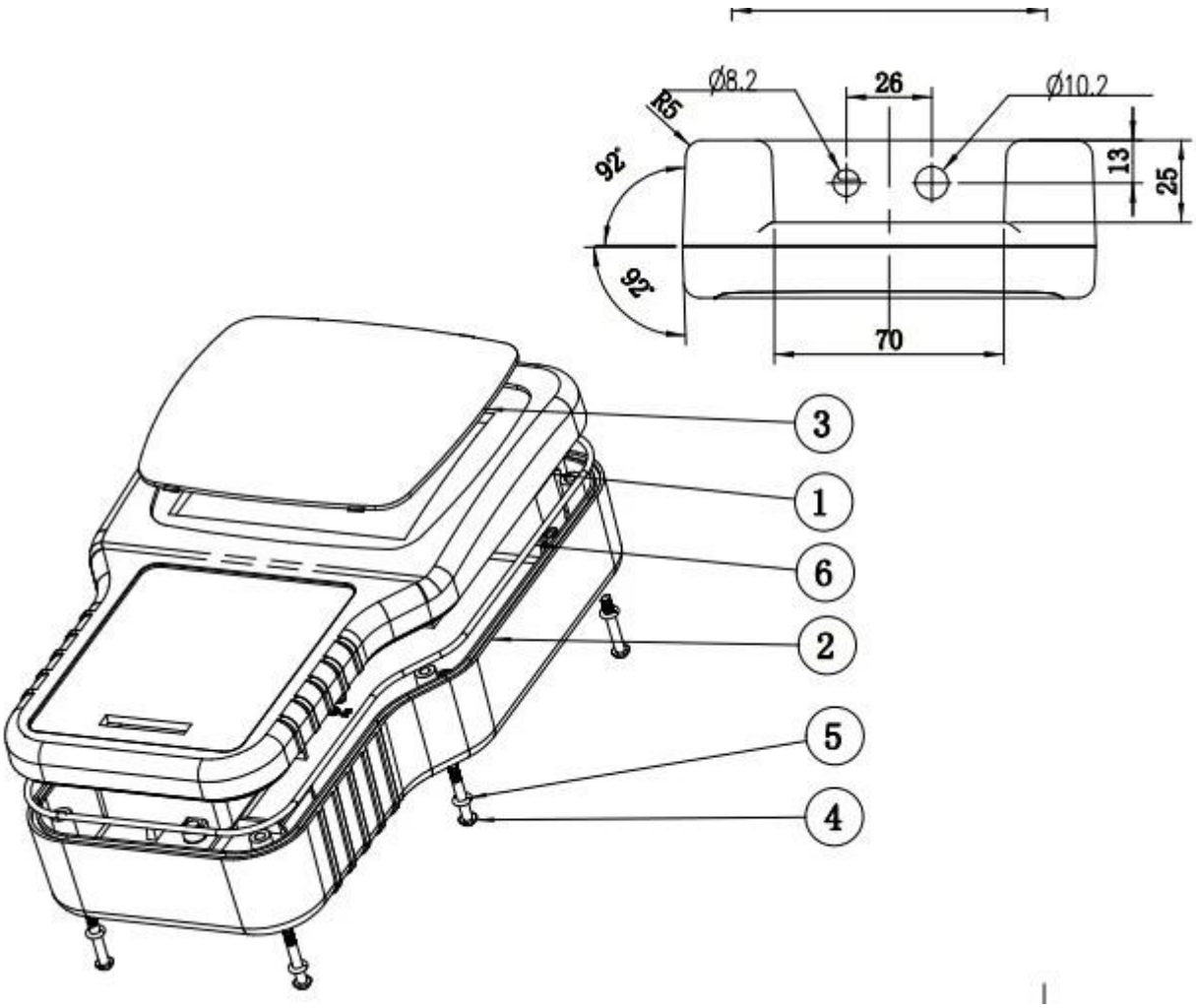

T/T, WESTERN UNION, MONEY GRAM AND PAYPAL ACCPETED.

Skype: 13691908477

Tel: 86-13691908477

Email: felix@chinaenclosure.com

Contact Us