[illegible]

1[illegible]
2[illegible]
3[illegible]
4[illegible]
5[illegible]
6[illegible]

[illegible]

[illegible]

[illegible]

1[illegible]/[illegible]
2[illegible]/[illegible]
3[illegible]
4[illegible]
5[illegible]

SZOMK

Enclosure Manufacturer

www.chinaenclosure.com

SZOMK

SZOMK

SZOMK

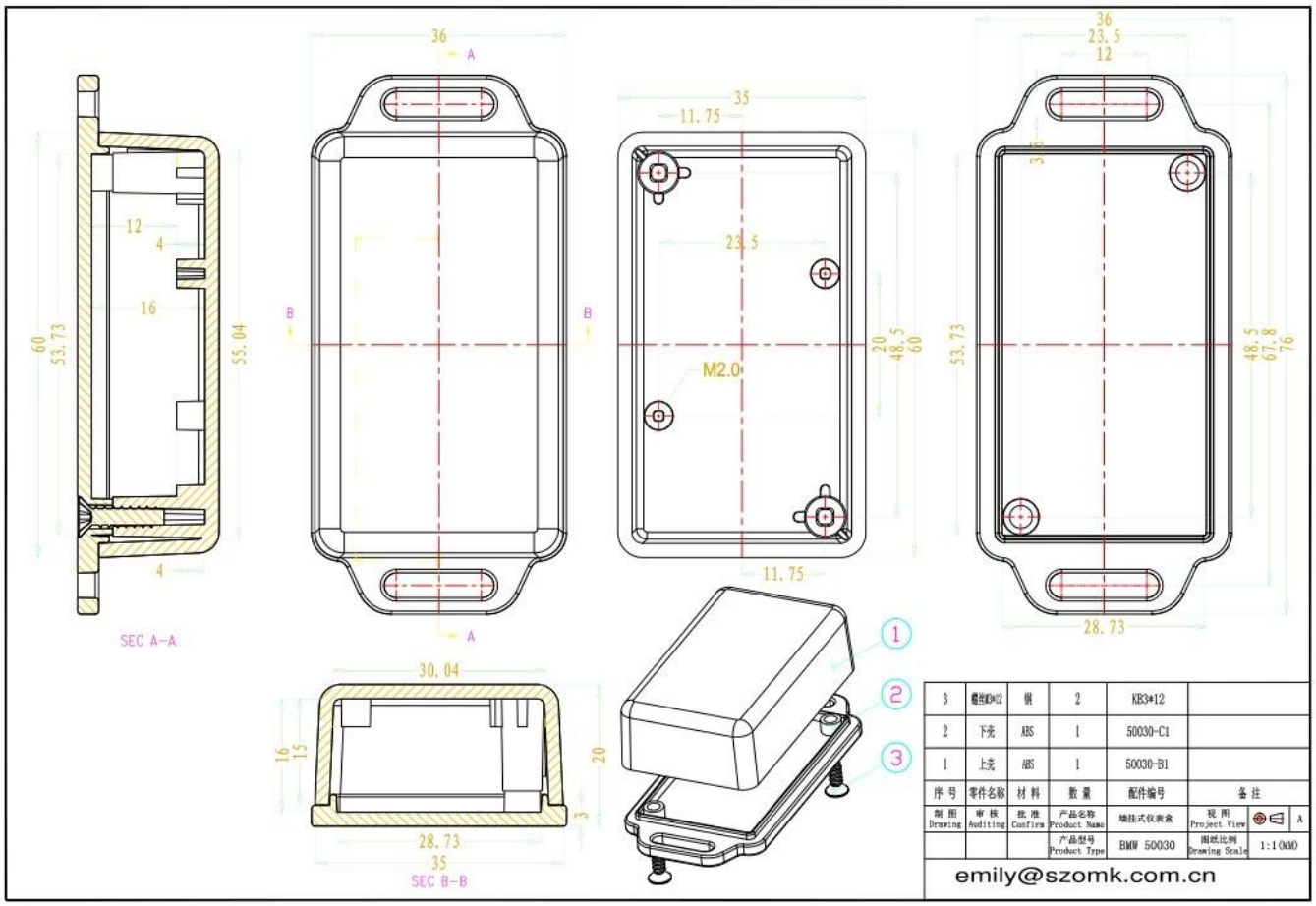

T/T, WESTERN UNION, MONEY GRAM AND PAYPAL ACCPETED.

Skype: 13691908477

Tel: 86-13691908477

Email: felix@chinaenclosure.com

Contact Us