# AK-C-C43 57 X 76 X 100 mm

SZOMK

Aluminum Box

# 57x76x100mm

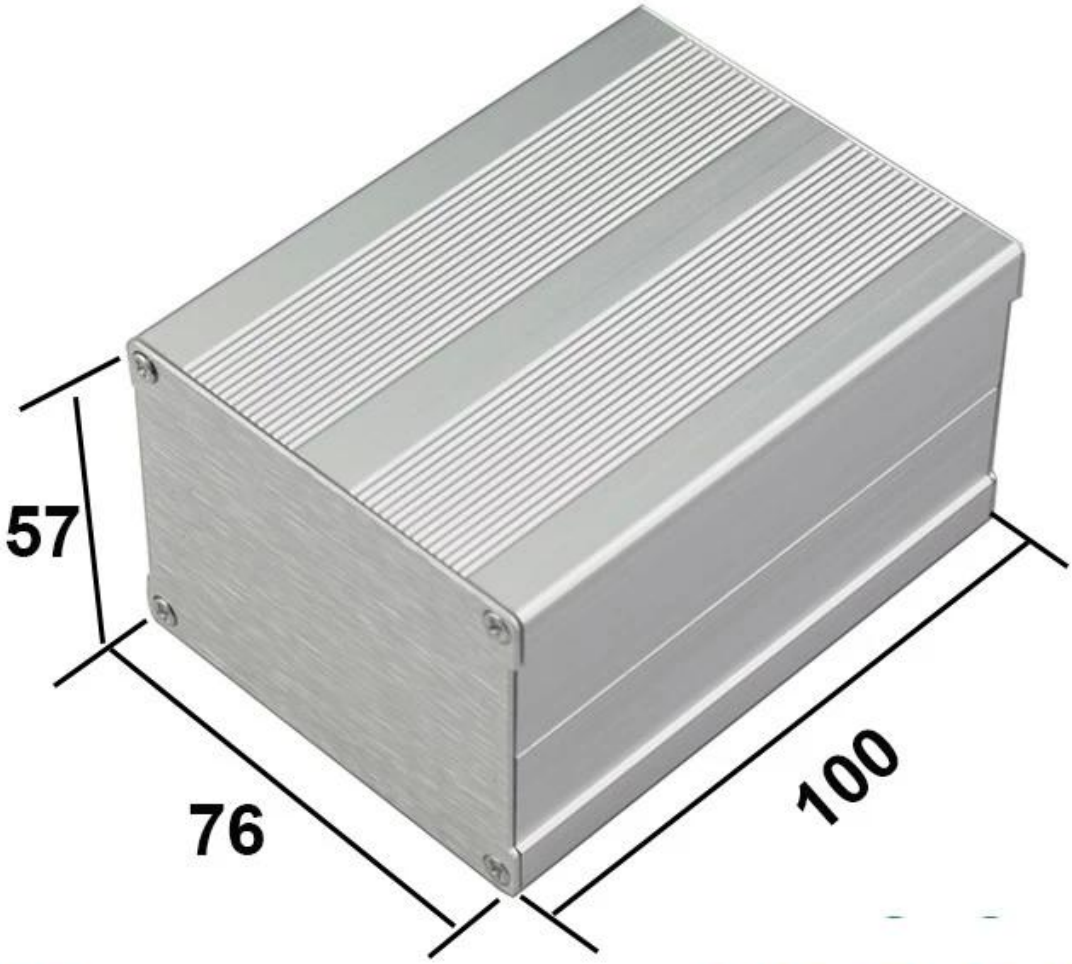


168g

AK-C-C43

SZOMK

Aluminum Box

# 57x76x100mm

168g

AK-C-C43

## □□□□□

| □□□□□□□□□□□□□□□□□□□□□□□□□□□□□□□□ | |
|---|---|
| □□□ | □□□□□□□ □□□□□□□ □□ |
| □□□□□ | AK-C-C43 |
| □□□ | 57 X 76 X 100 mm / 2.24 * 2.99 * 3.94□□□ |
| □□ | 168g |
| □ | □□□□□□□□□□ □□□ □□□ □□ □□□□ □ □ |
| □□ | □□□□□□□□□□□ |
| □□□□□□□□□□□ | □□□□□□□/□□□□□□□□□ □□/□□□□□□/□□□□ □□/□□□□□ □□□ □□ □□ |

| | |
|---|---|
| [illegible] | PDF / CAD / 3D |
| [illegible] | [illegible] DIY [illegible] |

[illegible] [illegible]

1.[illegible]
2.[illegible]
3.[illegible]

## [illegible] [illegible]&[illegible]

1.[illegible]

MOQ[illegible]1[illegible]

2.[illegible]DIY[illegible]customcervice ----- MOQ[illegible]20-50 PC

3.[illegible]PCB[illegible]

4.[illegible]Providesample[illegible]STEP[illegible]

6.Customized□□□□□□□□□□□□/□/□□□□/□□□□□□□□□□□□□/□□□□□□□□□/□□□□□□□/□□□□/□□□□□/□□□□□□□□□□□□

## □□□□□□□□□□

SHENZHENOMK ELECTRONICS CO□□LTD□□□□□□□□□□□□□□□□□□□□□□□□□□□□□□□□□□□□□□□□□□□□□□□□□□□□□□□□□□□□□□□□□□1□□□□□1000□□□□□□□□□□□□□□□□□□□□□□□□□□□□□□□□□□□□□□□□□□□□□□□□□□□□□□□□□□□□□□□□□□□□□□□□□□□□□□□□□□□□□□□□□□□□□□□□□□□□□□□□□□□□□□□□□□□□□□□□□□□□□□□□□□□□□□□□□□□□

## SZOMKADVANTAGE□

[illegible]

2[illegible]

3[illegible]

[illegible]

| | |
|---|---|
| [illegible] | 1-3[illegible] |
| [illegible] | 3-10[illegible] |
| [illegible] | 10-20[illegible] |

[illegible]

[illegible]

T/T, WESTERN UNION, MONEY GRAM AND PAYPAL ACCPETED.


Skype: SZOMK_Sukey Xiao

Tel: +86 13392817030

E-mail: sukey@szomk.net


Contact Us