SZOMK□□□□□□□□□□□□□□□□□□□□□□□□ip54□□□□□□□□□□□□□□□□□□□

□□□□□□

□□□□□

□□□□□□□□□□□□□	
□□□	□□□□□□ □□□□□□□□□□□□□
□□□□□□	AK-H-06

□□□	126×81×30 mm / 4.96 * 3.19 * 1.18□□□
□□	95g
□□□□□□	□/□/□□□□□□□□□□□□□□□□□□□□
□□□□□□	□□□□/□□□□/□□□□□□□□□□□□□□□□□□□
□□	ABS□□
□□□□□□□□□□	□□□□/□□□□□□□□/□□□□□□/□□□□□/□□□□□/□□□□□□□□
□	PDF / CAD / 3D
□□	□□□□□□□□□□□□□□DIY□□□□□□□□□□

□□□ [□□□□□□□□□□□□□□□□□□]

1.□□□weat□□□□□□□□□□□□□□□□corr□□□□□□

2.□□□□□□□□□□□□□□□□□□□□□□□□□□□□□□□□□□□□□□

3.□□□□□□□□□□□□□□□□□□□□□□□□□□

□□□□□□□□

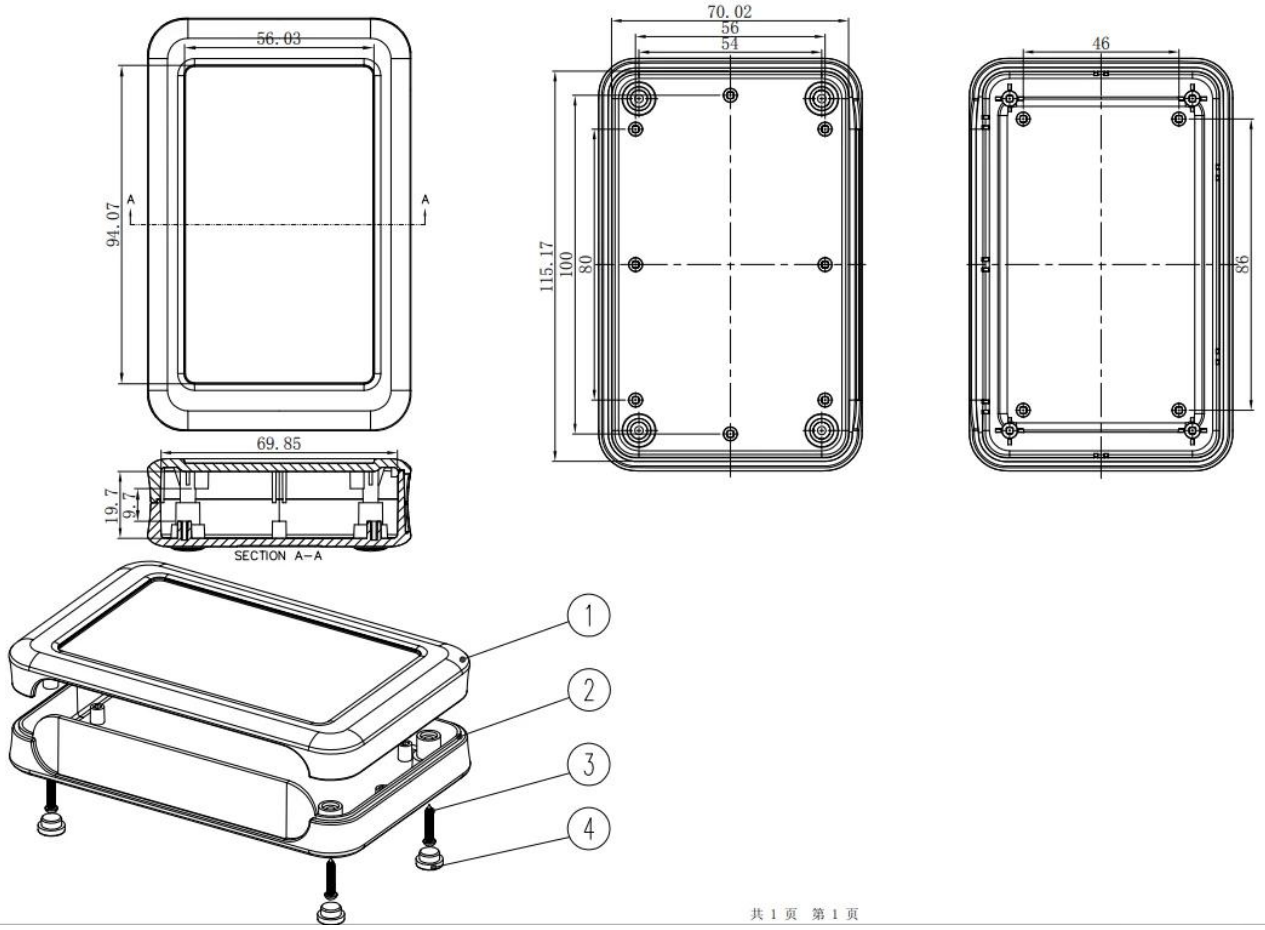
56.03
94.07
A
A
69.85
19.7
9.7
SECTION A-A
70.02
56
54
115.17
100
80
46
86
1
2
3
4

W□□□□□□□□□□□□□□□□□□□□A□□ □□□□□□□□□

1.□□□□□□□□□□□□□□□□□□□□□□□□□□□□

 MOQ□1□

2.We□DIY□□□□□□□□□□□□□□□□□□----- MOQ□20-50□

3.□□□□□□□□□□□□□□□□□□□□PCB□□□□□

4.□□□□□□□□□□□□□STEP□□□□□□□□

6.Customized□□□□□□□□□/□□/□□□□□□/ PVC□□□/□□□□□□/□□□□□/□□□□/□□□/
□□□□□

□□□□□□□□

□□□OMK ELECTRONICS CO□□□1□□□□□□□□□1000□□

[□□□□□□□]()

ODM
OEM
R&D
CUSTOMIZE
Advanced
TECHNOLOGY
Strictly
QUALITY CONTROL
Excellent
SERVICE TEAM
Certificate of Compliance
RoHS
EBO
Certificated iso,quality assurance
Certificated FCC &CE
Small order
It's no problem
MOQ=1
QTY order
Highqualityshort
delivery time
Urgent order
Urgent order no problem
how many pcs finished
we will senting to you at once
Processing experts aroundyou!
SZOMK

Pac□□□&□□□□ver□ f○r □□□□□□□□□□□□□□□□□□

□□□□□□

1[illegible]

2[illegible]

3[illegible]

[illegible]

[illegible]	1-3[illegible]
[illegible]	3-10[illegible]
[illegible]	10-20[illegible]

R[illegible]s[illegible]E[illegible]