SZOMK□□□□□□□□□□□□□□□□□□□□□□□□ip54□□□□□□□□□□□□□□□□□□□

□□□□□□

□□□□□

□□□□□□□□□□□□□	
□□□	□□□□□□ □□□□□□□□□□□□□
□□□□□□	AK-H-06

□□□	126×81×30 mm / 4.96 * 3.19 * 1.18□□□
□□	95g
□□□□□□	□/□/□□□□□

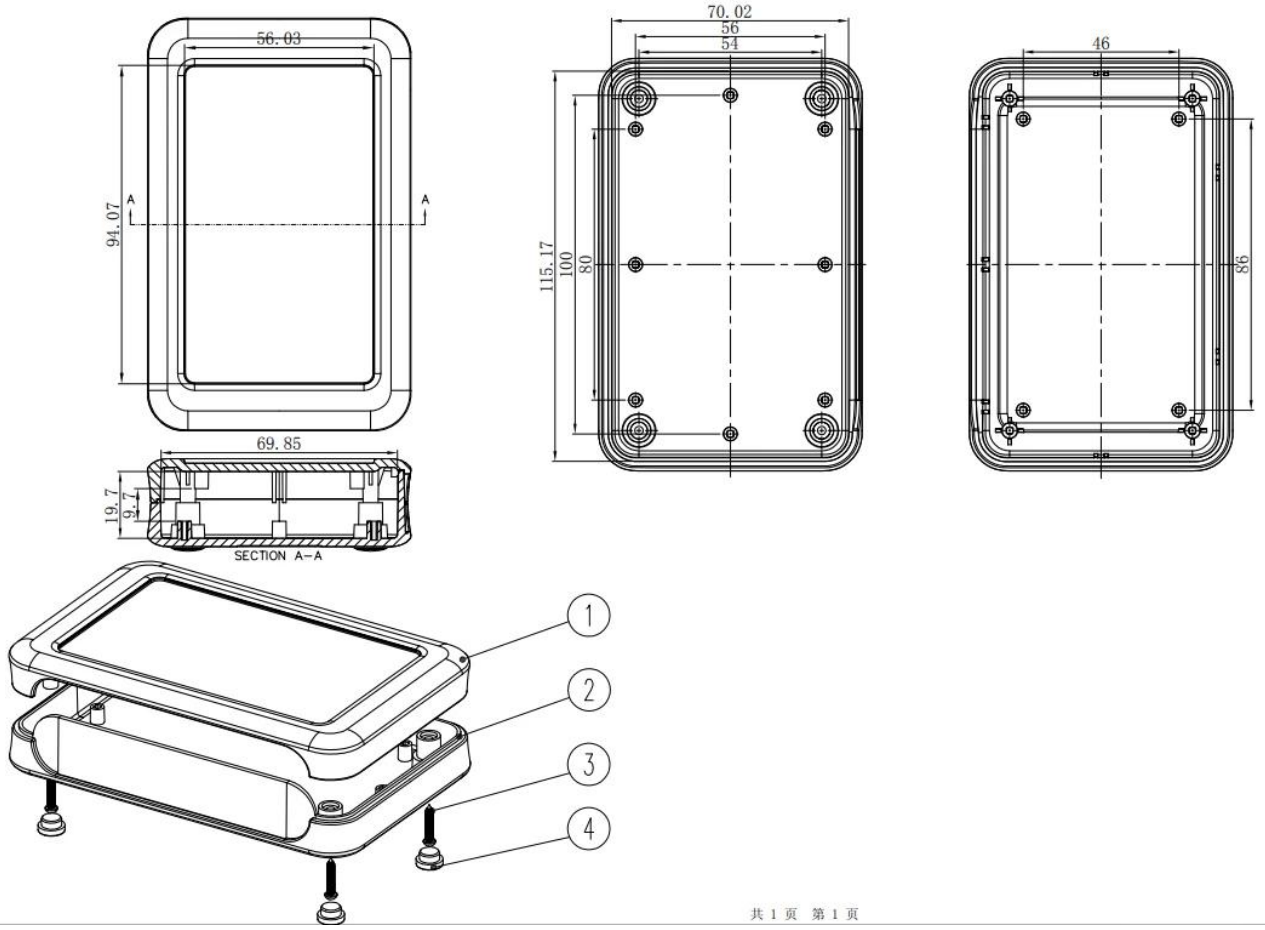
56.03
94.07
A
A
69.85
19.7
9.7
SECTION A-A
70.02
56
54
115.17
100
80
46
86
1
2
3
4

W□□□□□□□□□□□□□□□□□□□□A□□ □□□□□□□□□

PVC label
Silkscreen
Acrylic plate
Lasder engraving
We can do customization
Mould
Sticker
Cutout
Silicone
Color

1.□□□

□□□OMK ELECTRONICS CO□□□

ODM
OEM
R&D
CUSTOMIZE
Advanced
TECHNOLOGY
Strictly
QUALITY CONTROL
Excellent
SERVICE TEAM
Certificate of Compliance
RoHS
EBO
Certificated iso,quality assurance
Certificated FCC &CE
Small order
It's no problem
MOQ=1
QTY order
Highqualityshort
delivery time
Urgent order
Urgent order no problem
how many pcs finished
we will senting to you at once
Processing experts aroundyou!
SZOMK

Pac□□□&□□□□ver□ f○r □□□□□□□□□□□□□□□□□□

□□□□□□

1□□□□□□□□□□□□□□□□□□□□□□□□□□□□□

2□□□□□□□□□□□□□□□□□□□□□□□□□□□□□

3□□□□□□□□□□□□

□□□

□□□□□□	1-3□□□
□□□□□□□□□□□□	3-10□□□
□□□□□□□□□□□□	10-20□□□

R□□□□□s□E□□□□□□□□□□□□□□□□□□□