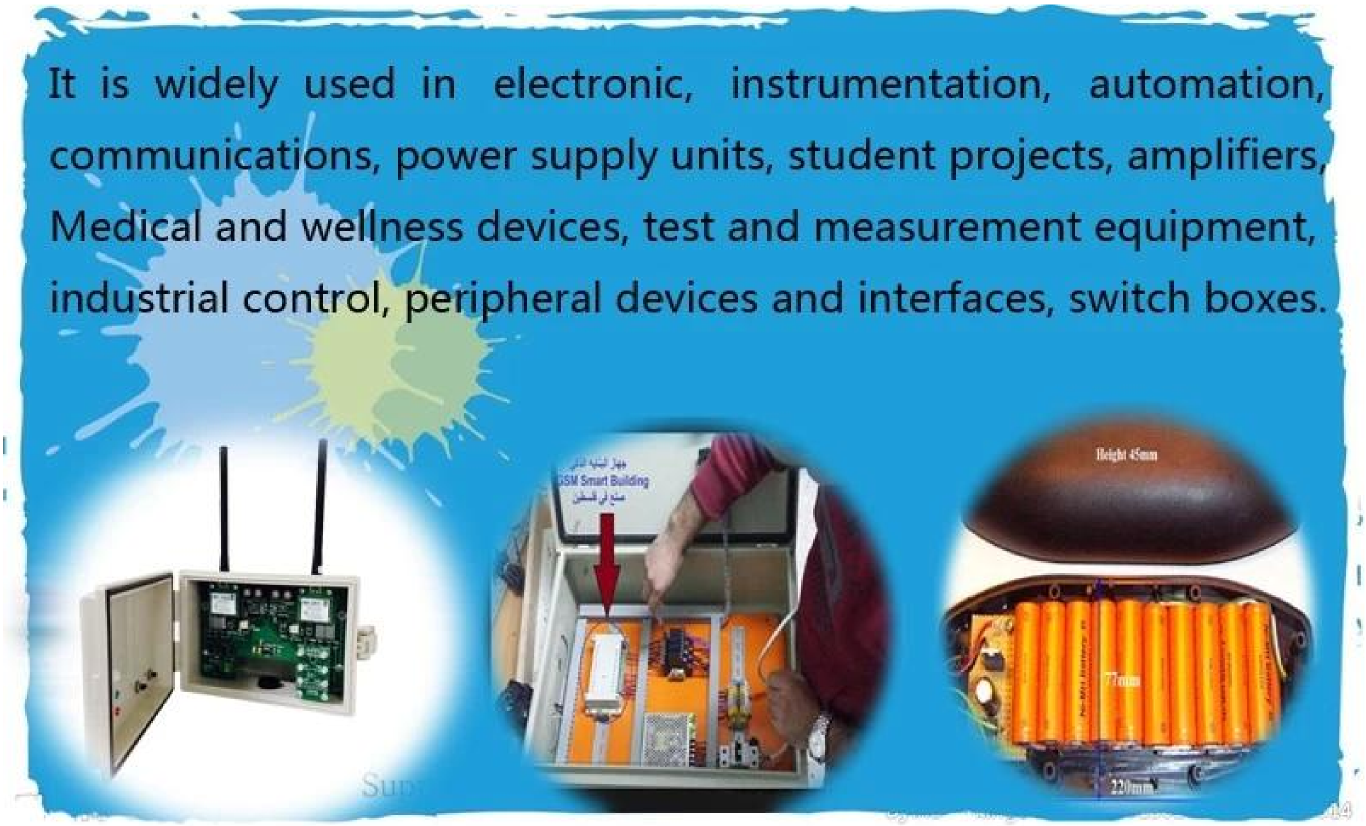

ABS[illegible]

1.[illegible]
2.[illegible]
3.[illegible]

[illegible]

1Drilling[illegible]Punching[illegible]
2[illegible]
3[illegible]3-5[illegible]
4[illegible]

ABS[illegible]

SZOMK

Enclosure Manufacturer

www.chinaenclosure.com

SZOMK

Customizable
cutout, sticker
silkscreen, color

Weight: 36g
Model No.AK-S-02

Size: 3.74*2.17*0.91 inch
95*55*23 mm

□□□□

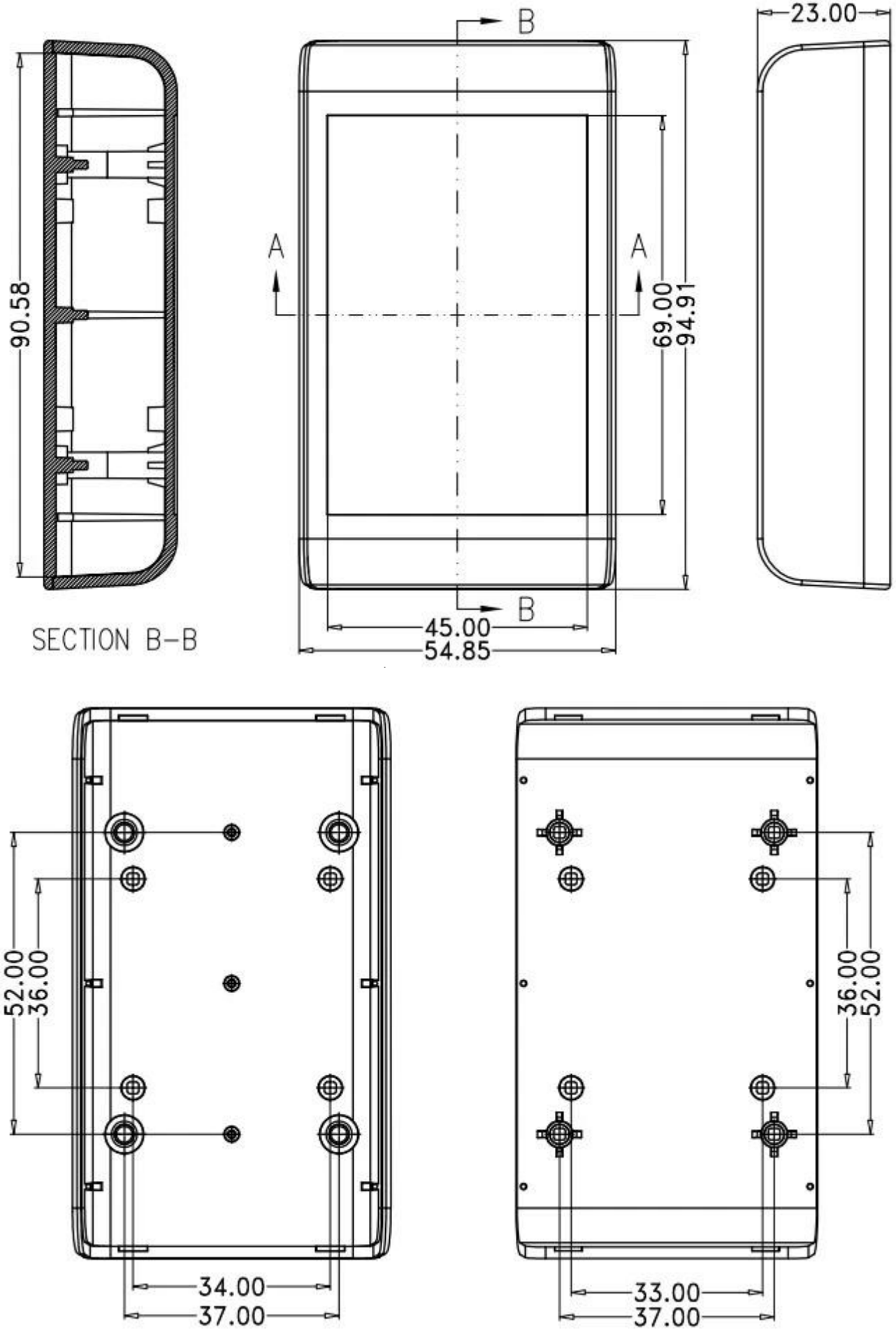
B
23.00
A
A
90.58
69.00
94.91
B
45.00
54.85
SECTION B-B
52.00
36.00
36.00
52.00
34.00
37.00
33.00
37.00

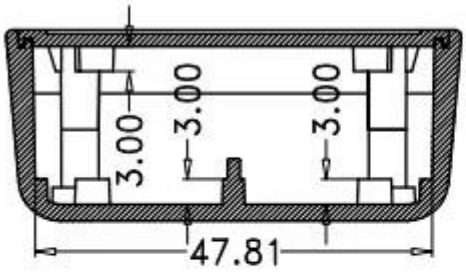

SECTION A-A

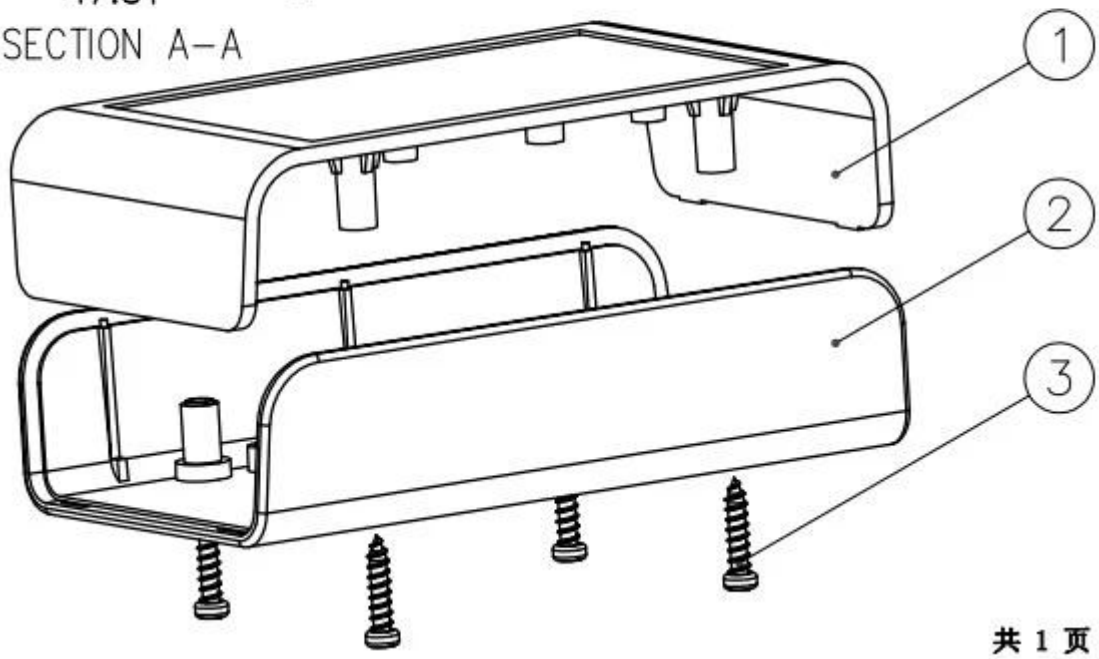

共 1 页

□□□□□□□□□□□

WE CAN DO
For HOUSING some of the Processing,
Openings、Screen、Stickers、PVC LABLE

□□□□□□□□□□

SZOMK

Our packaging

Plastic foam packaging

Metal shell packaging

Plastic box packaging

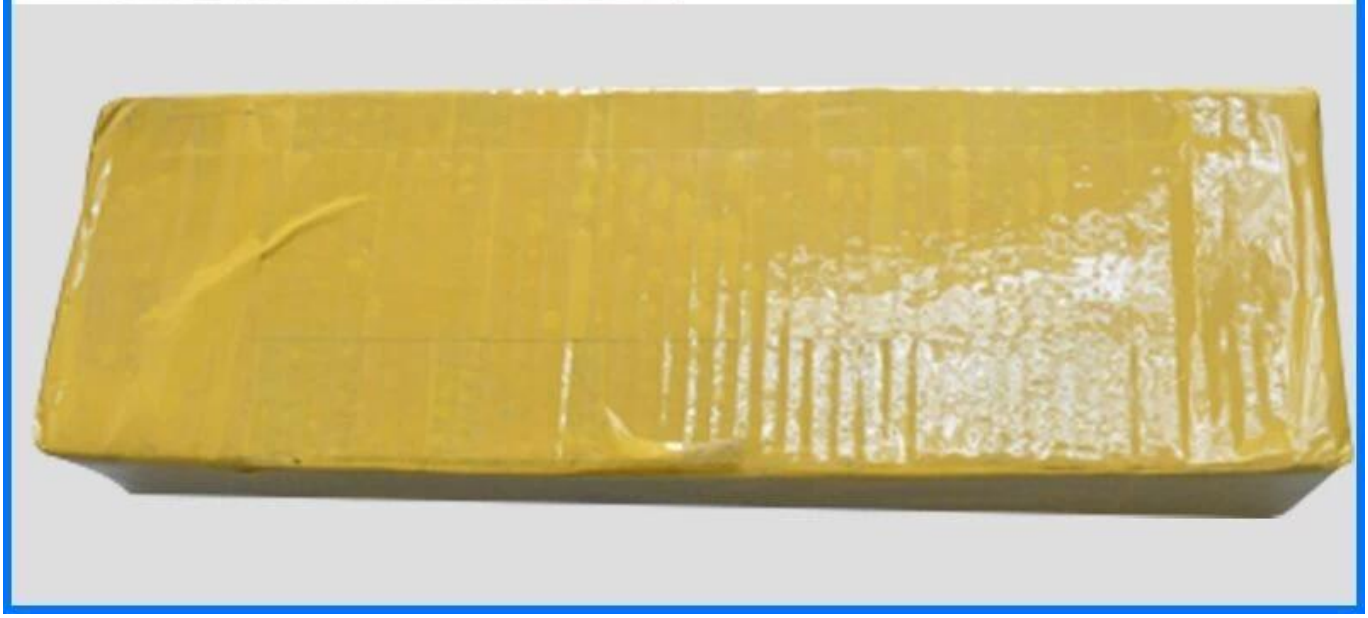

Packaging & Shipping

□□□□□□