[illegible]&[illegible]038;[illegible]

[illegible] [illegible]
[illegible] 5-15[illegible]get[illegible]

[illegible]

1.Type[illegible]PCB[illegible]
2.[illegible]AK-C-A30
3.[illegible]33.5x103xfree[illegible]mm[illegible]1.32 "x4.06"[illegible]XFree

[illegible]PCB[illegible]

[illegible]PCB[illegible]

[illegible]PCB[illegible]

1.[illegible]

2.[illegible]

3.[illegible]

[illegible]PCB [illegible]

[illegible]SZOMK

[illegible]PCB[illegible]

[illegible]

[illegible]AK-C-A30

[illegible]33.5x103xfree[illegible]mm[illegible]1.32 "x4.06"[illegible]XFree

[illegible]

MOQ[illegible]20[illegible]

SZOMK

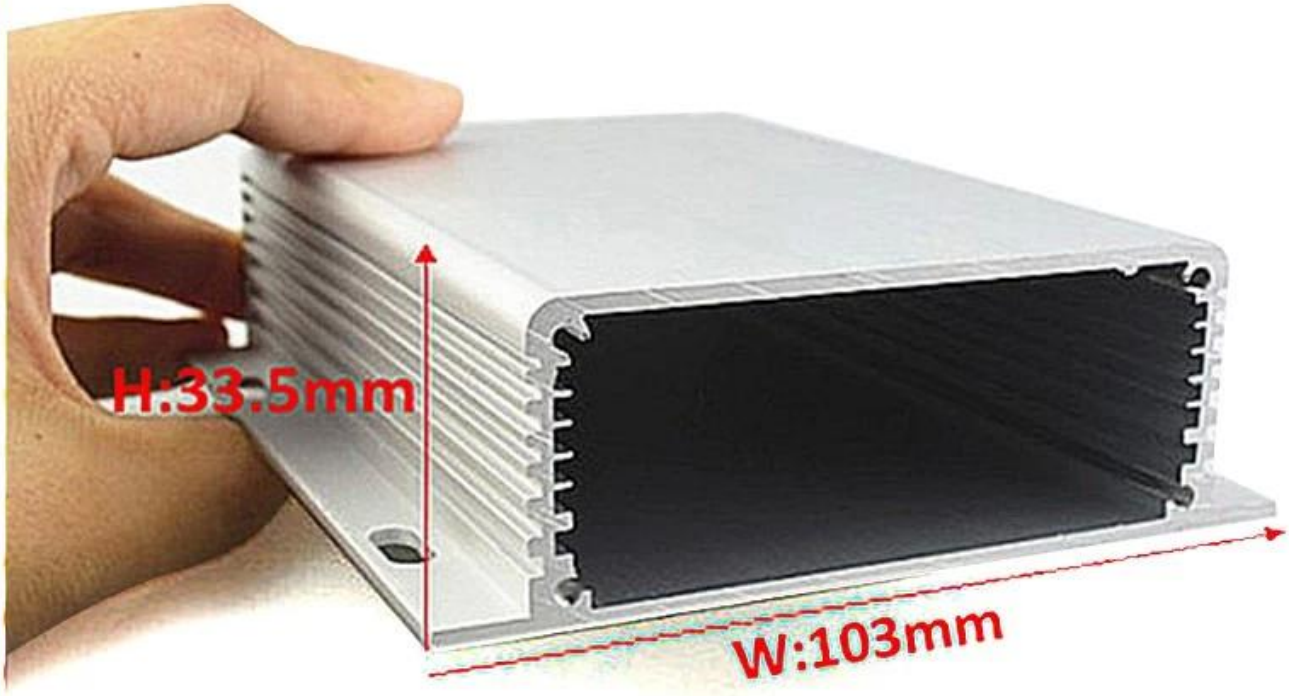

SZOMK

SZOMK

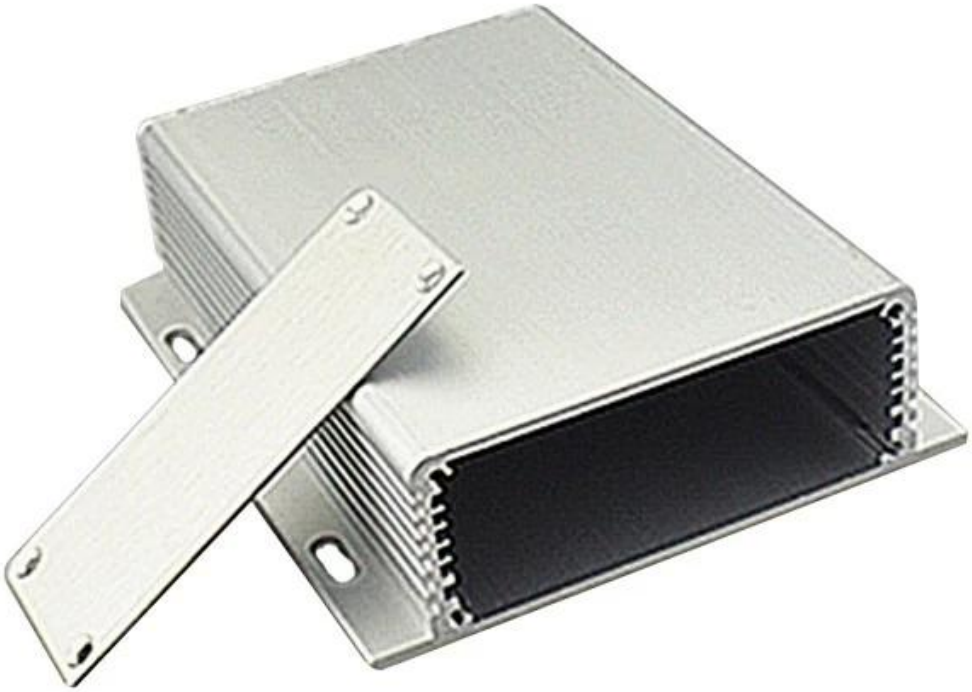

SZOMK
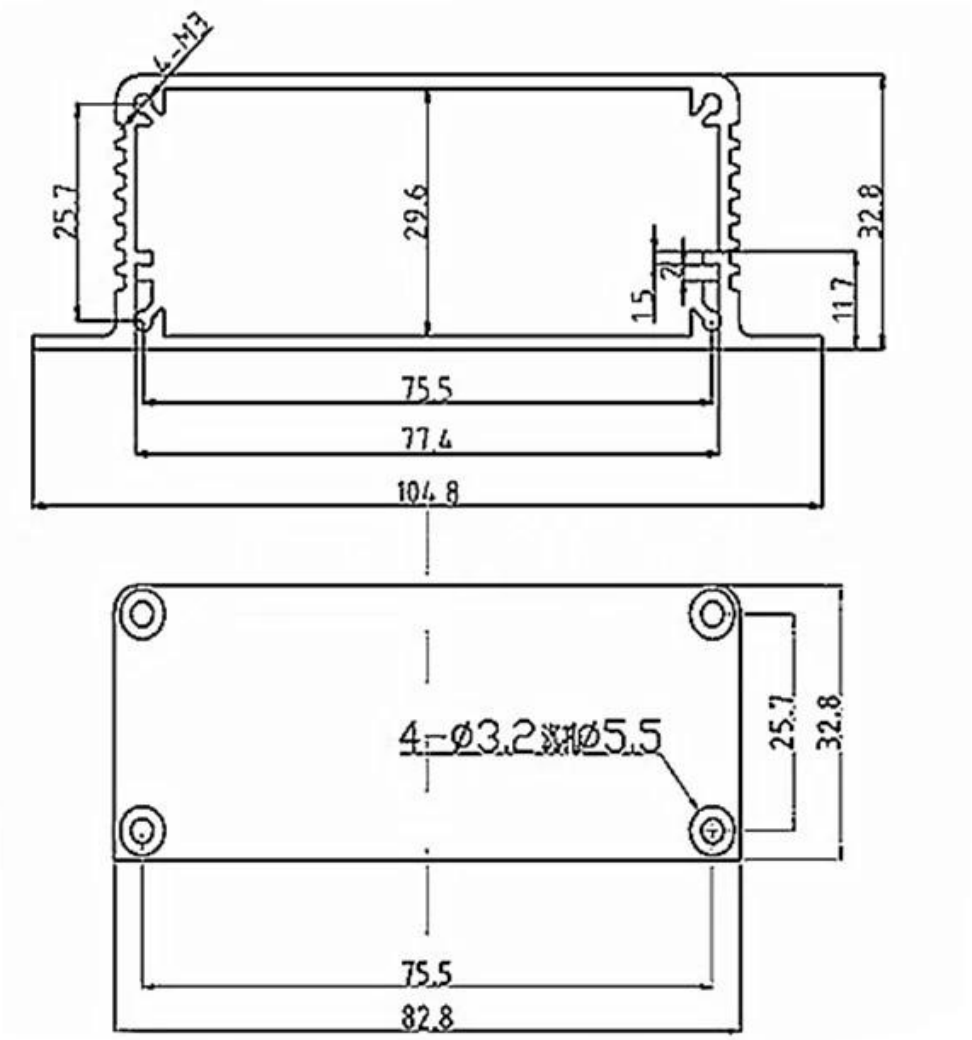
SZOMK