□□□□□□□□□□□□□□□□□

1□□□□□□□□□□□□□□□□

SZOMK

SZOMK

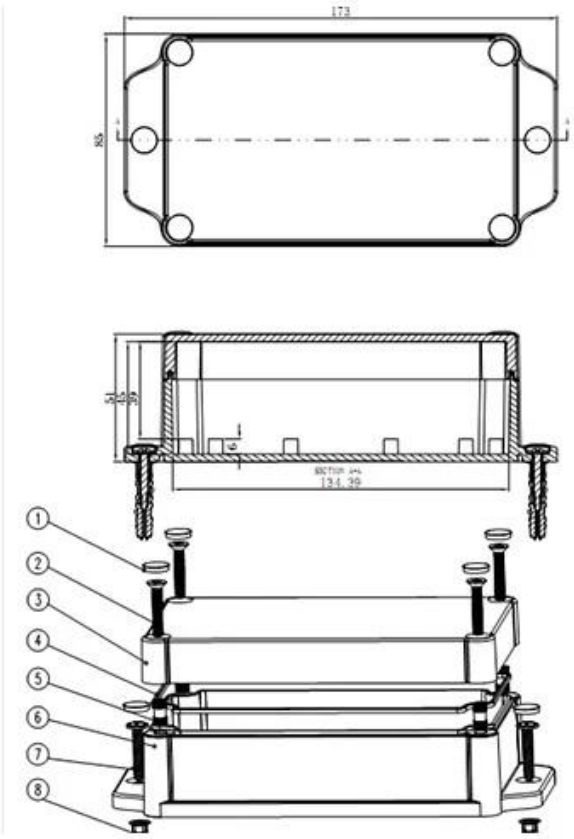
173
85
SECTION A-A
134.39
1
2
3
4
5
6
7
8

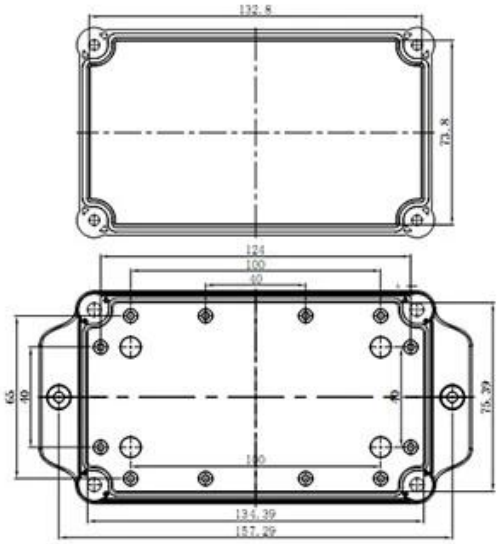
132.8
73.8
124
100
40
65
39
40
75.39
100
134.39
157.29

SZOMK

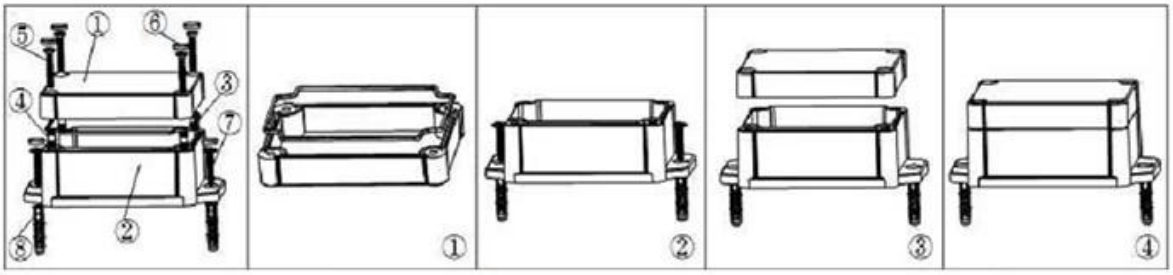

①

Epitheca (1PCS)
Material:PC
Color:Transparent

②

Hypotheca (1PCS)
Material:ABS
Color:Light Grey(FS20412)

Gasket (1PCS)
Material:Rubber
Size:96.5*64.5*1.8 mm

Copper Nut(6PCS)
Material:Copper
Standard:M4*10
Color:Copper

Grub Screw(6PCS)
Material:Stainless Steel
Standard:M4*25

Screw Lid(6PCS)
Material:ABS
Color:Light Grey(FS20412)

Self-Tapping Screw(4PCS)
Material:Iron
Standard:M4*30

Wall Nail(4PCS)
Material:PP
Color:Light Grey(CM906)

QQ 2819022460

Tel 86-755-83222882
86-13418600500

Add 628Room,505 Building ,Shangbu industry, Hangtian road ,Futian district ,Shenzhen, China,518031

Email hellen@szomk.com.cn

skype szomk-002