[illegible]

1.[illegible]
2.[illegible]
3.[illegible]
4.[illegible]
5.[illegible]
6.[illegible]
7.[illegible]
8. PVC[illegible]
9.[illegible]
10.[illegible]

[illegible]

[illegible]·[illegible]

[illegible]

[illegible].-[illegible]24[illegible]

SZOMK

Customizable
Cutout,sticker
Silkscreen,color

Weight :189 g
Model No. AK-H-36

Size:6.73*3.86*1.22 inch
171*98*31 mm

SZOMK

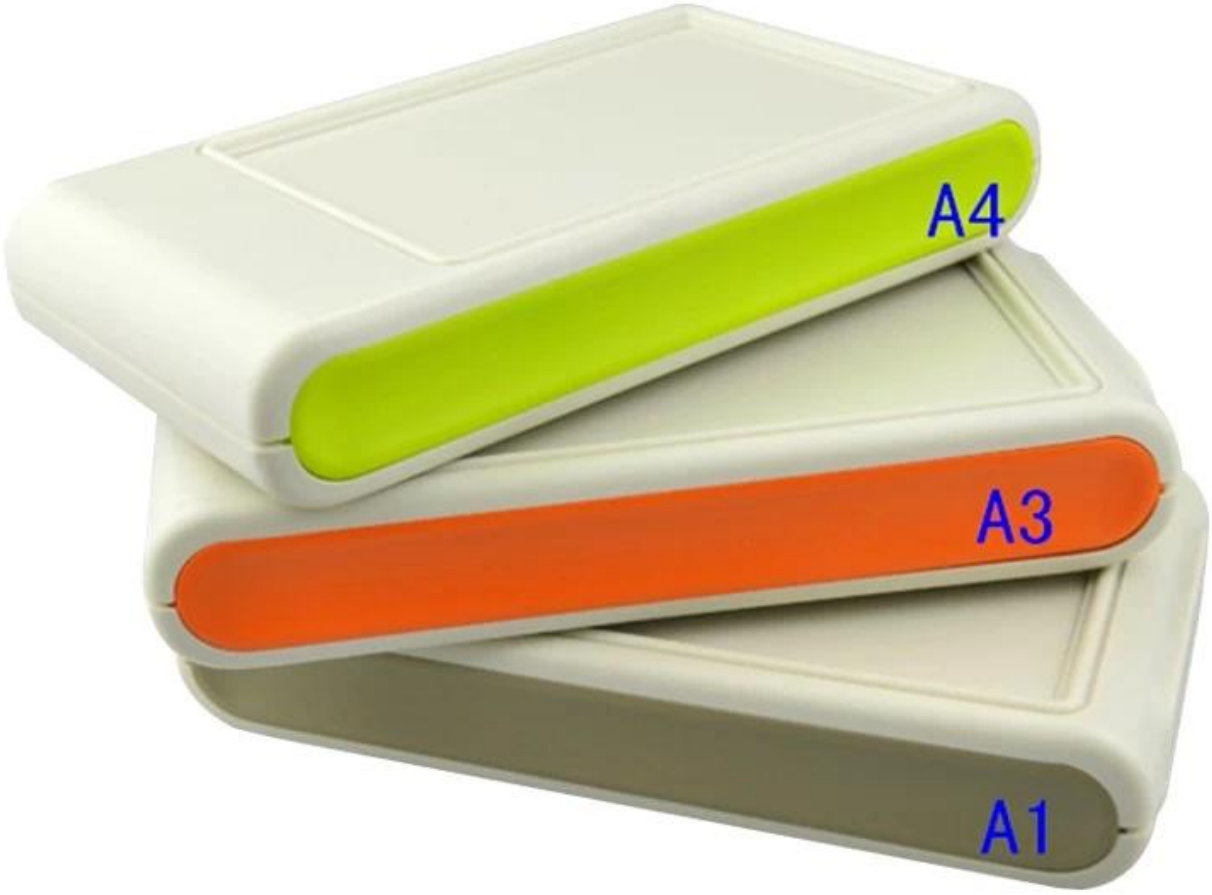

SZOMK

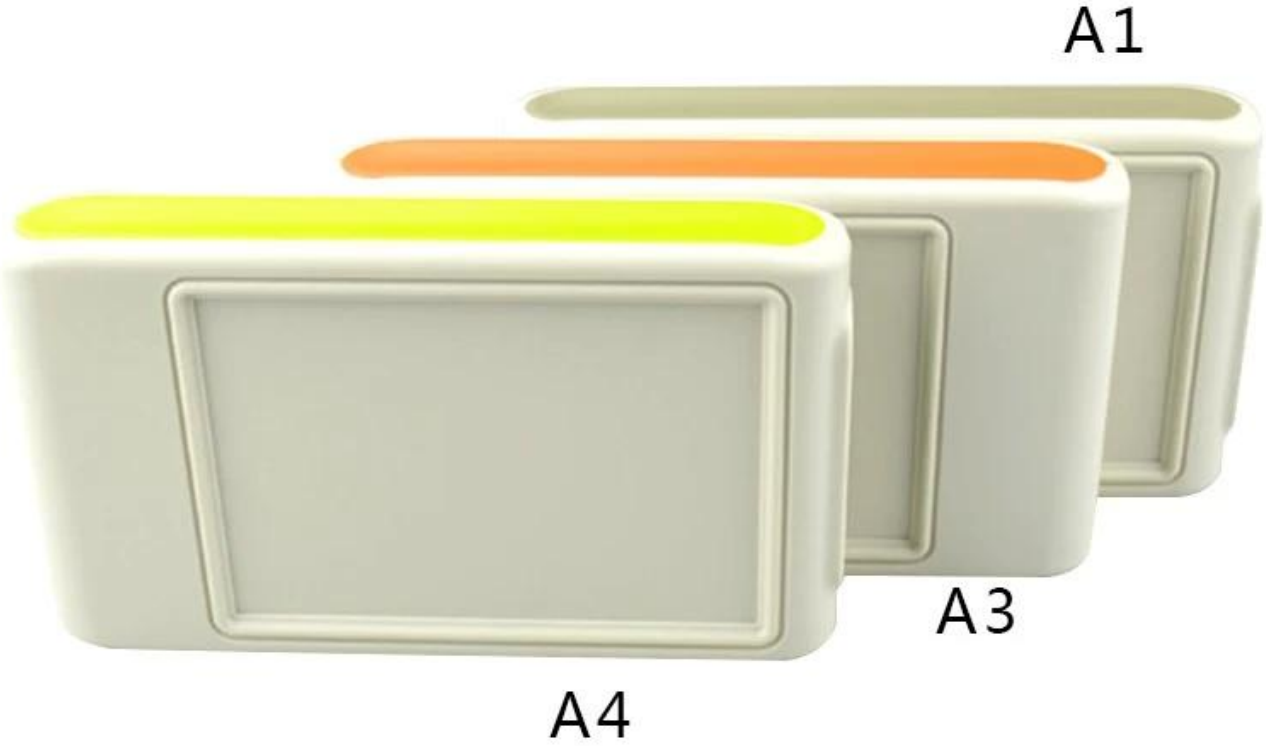

SZOMK

SZOMK

SZOMK

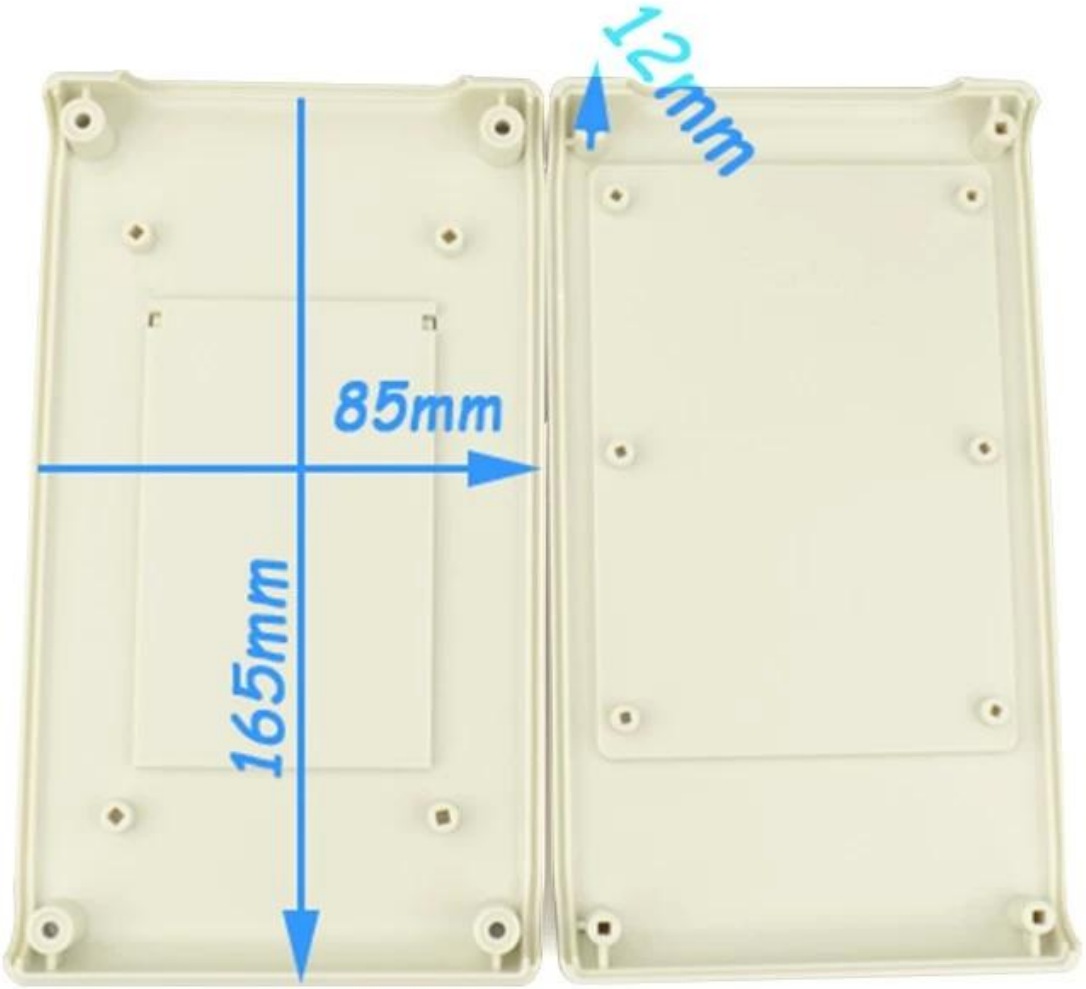

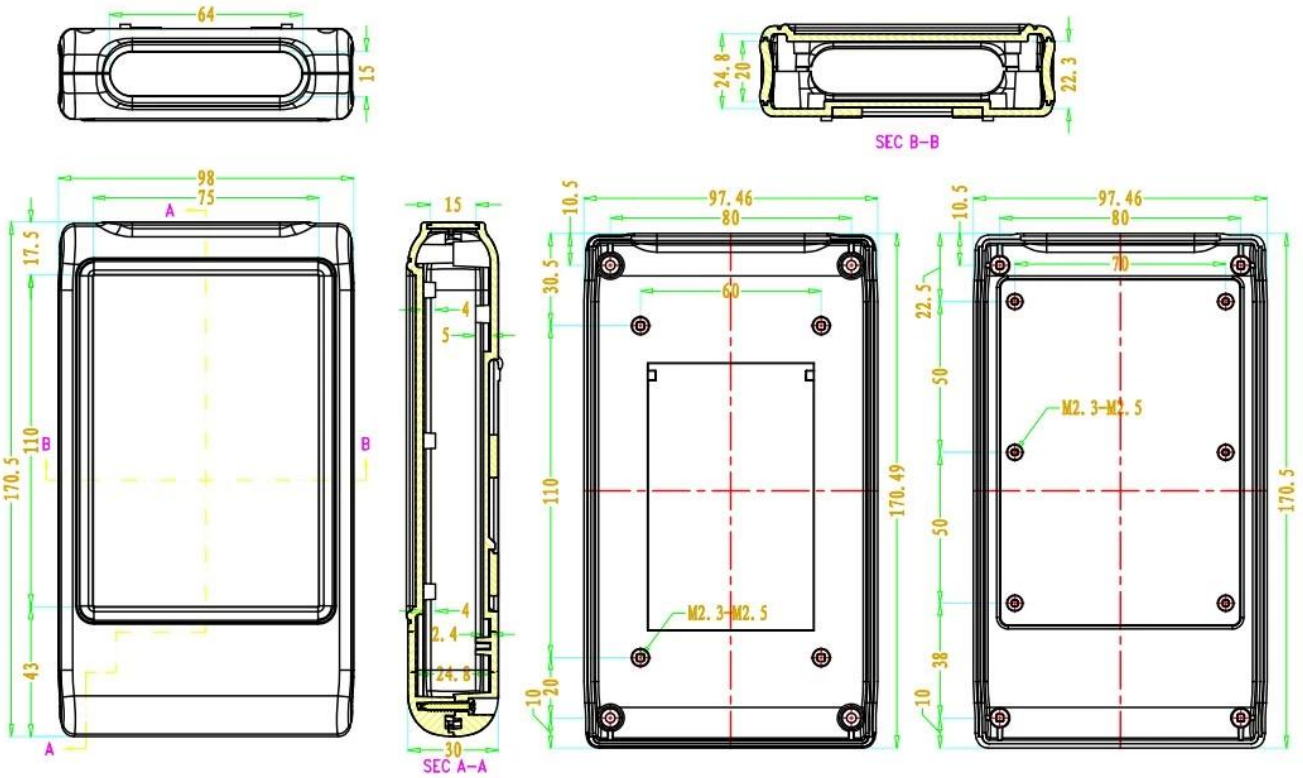
64
15
24.8
20
22.3
SEC B-B
98
75
A
17.5
110
B
170.5
43
A
15
4
5
4
2.4
24.8
30
SEC A-A
10.5
97.46
80
30.5
60
110
170.49
M2.3-M2.5
10
20
10.5
97.46
80
70
22.5
50
M2.3-M2.5
50
38
10
170.5

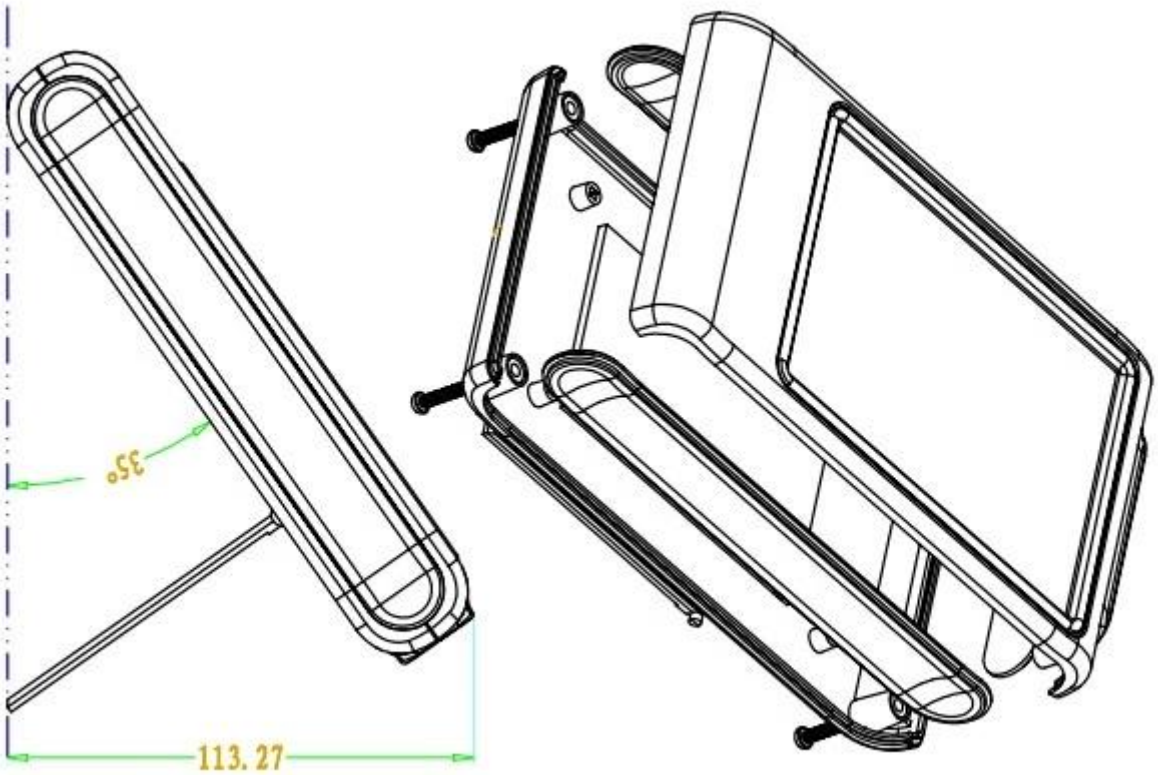
35°
113.27

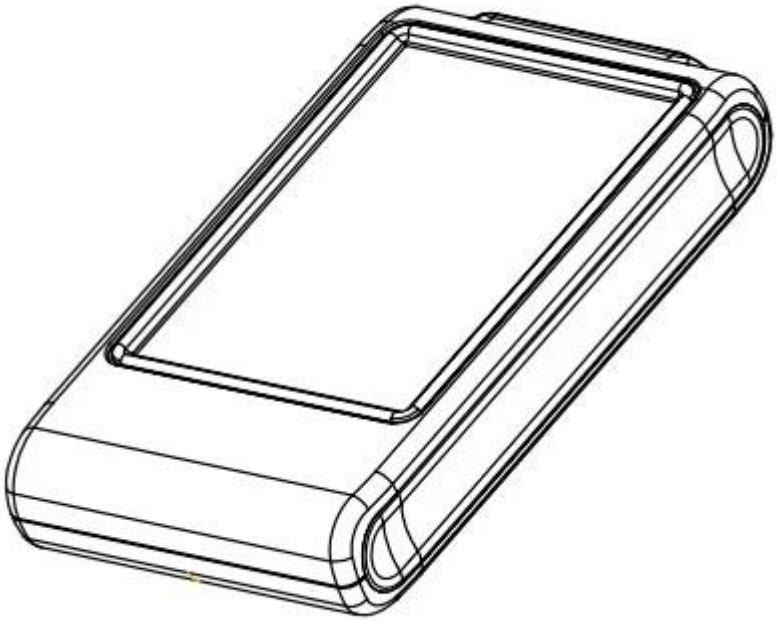

QQ 505924585

Tel 86-755-83222882
86-13028816914

Add 628Room,505 Building ,Shangbu industry, Hangtian road ,Futian district ,Shenzhen, China,518031

Email lily@szomk.net

skype szomk006