□□□

1□□□

SZOMK

Enclosure Manufacturer

www.chinaenclosure.com

SZOMK

SZOMK

SZOMK

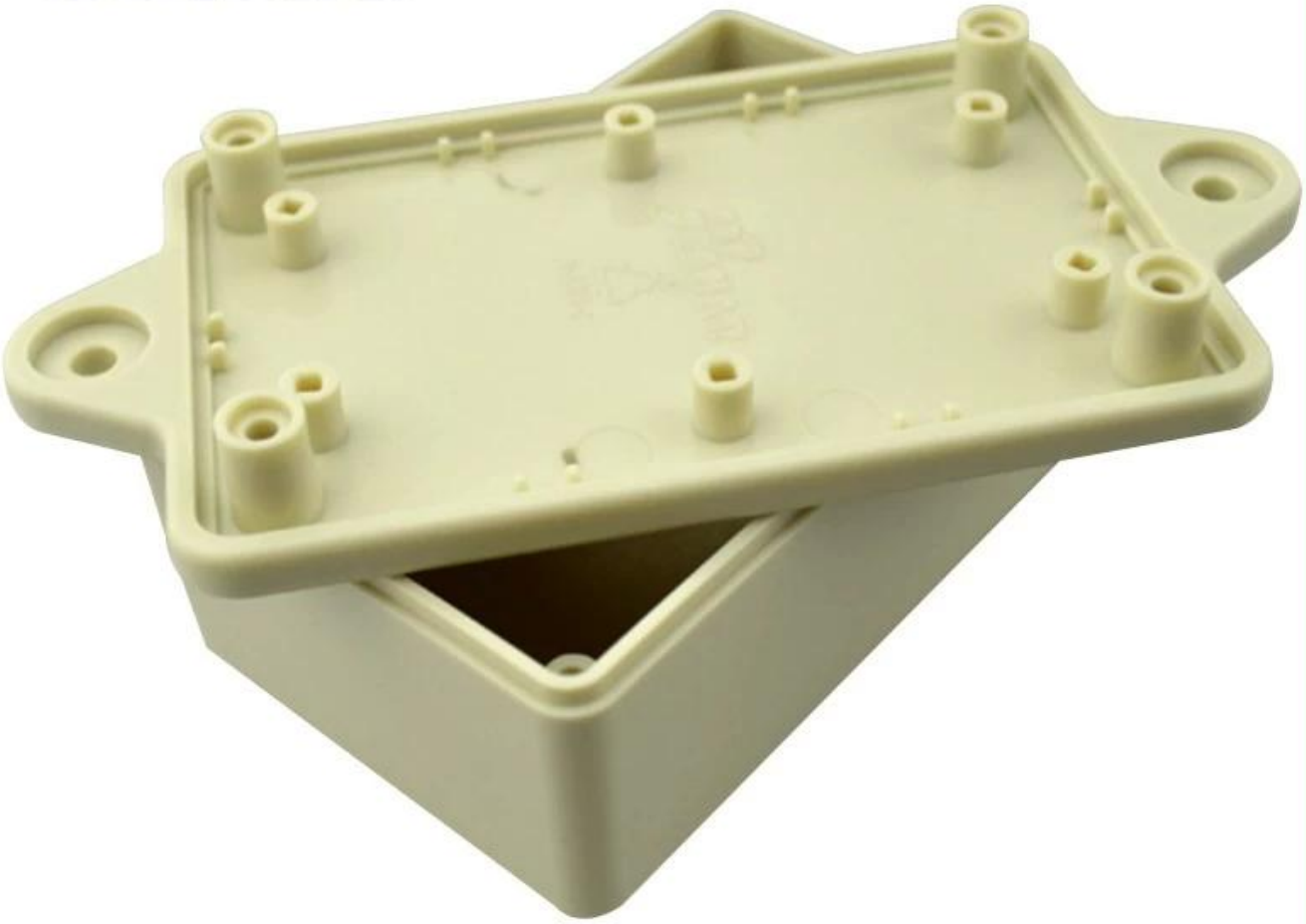

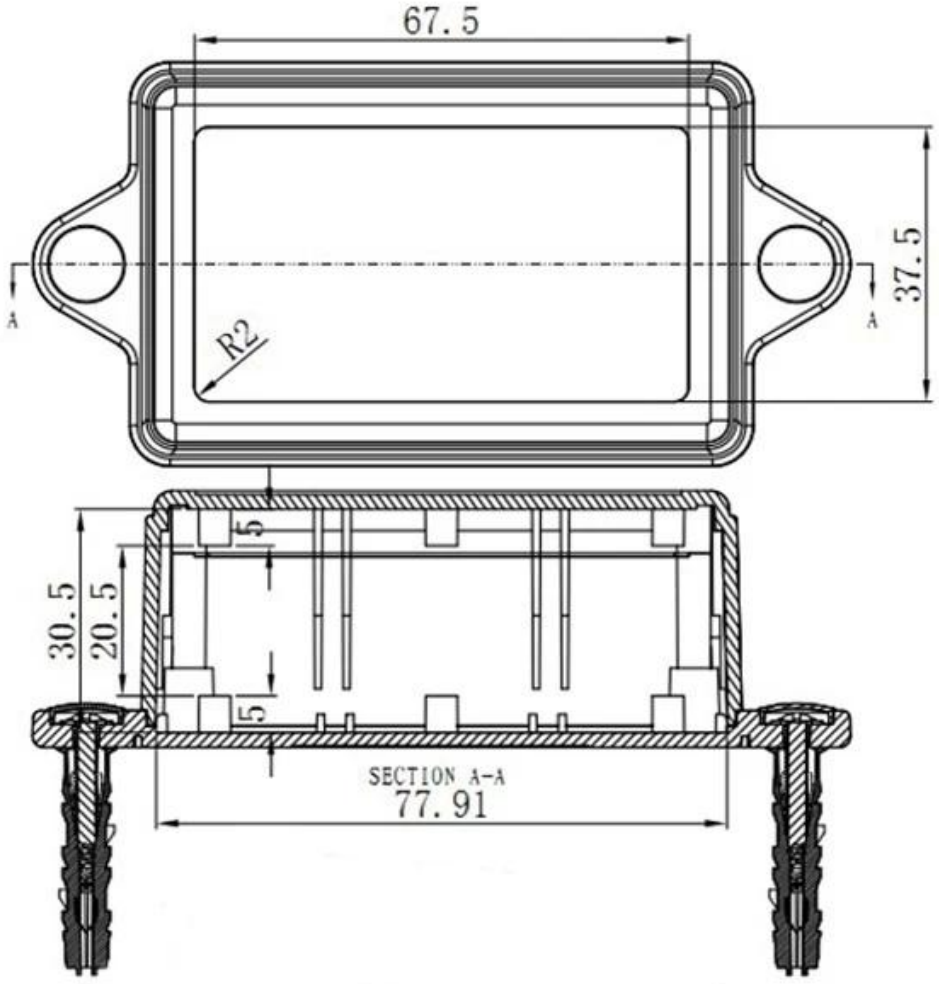
67.5
37.5
A
A
R2
30.5
20.5
5
5
SECTION A-A
77.91

SZOMK

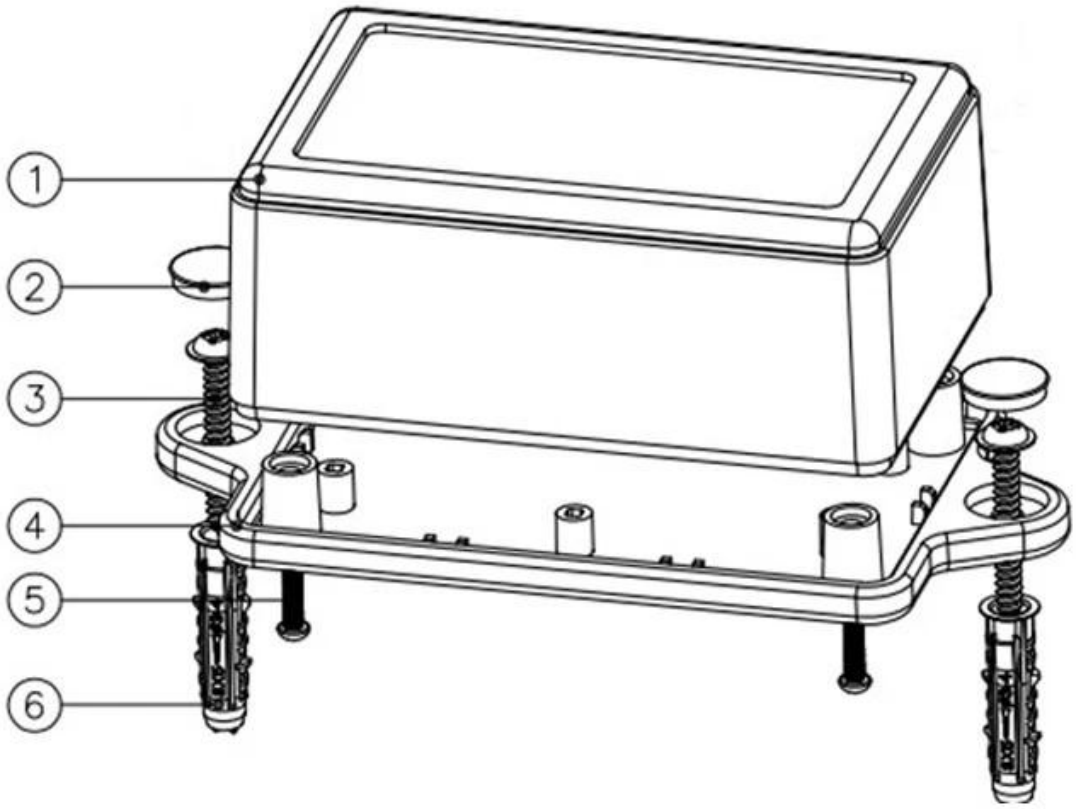

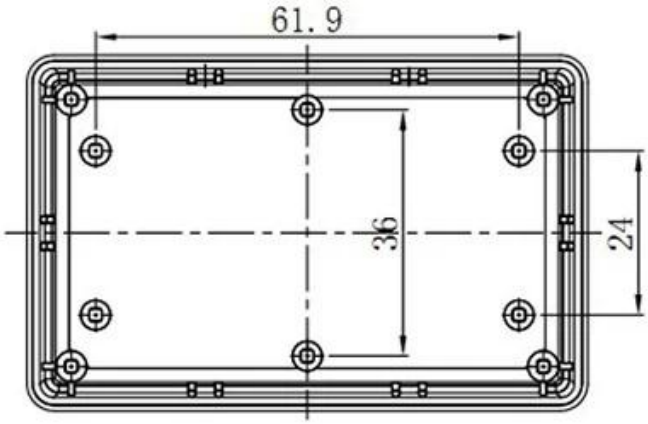
61.9
36
24

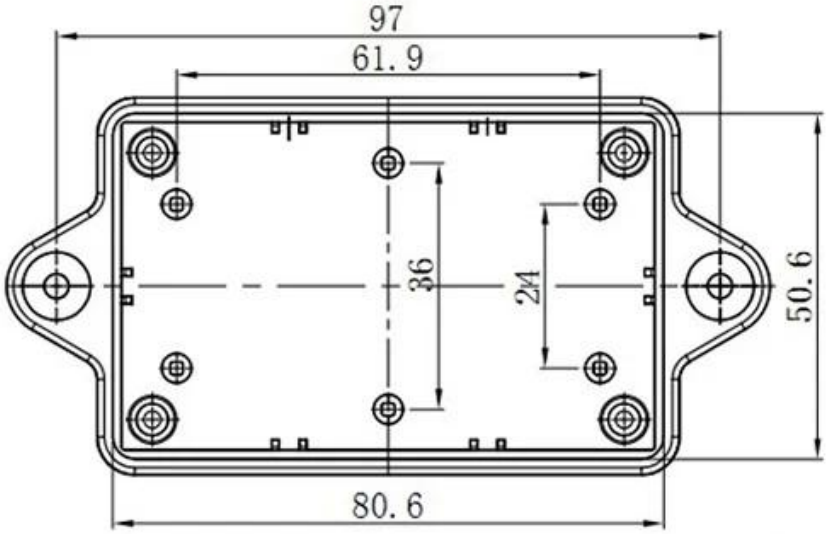
97
61.9
36
24
50.6
80.6

QQ 2406659781

Tel 86-755-83222882
86-18598241813

Add 628Room,505 Building ,Shangbu industry, Hangtian road ,Futian district ,Shenzhen, China,518031

Email emily@szomk.com.cn

skype szomk1010