30 * 100 * 160mm□elecronic□□□□□□□□□□□□□□□□ □□□□□□□□□□□□□□

□□□□□□

□□□□□

□□□□□□□□□□	
□□□	□□□□□□□□□□□□□□□
□□□□□	AK-NW-03
□□□	160×100×30mm / 6.3×3.9×1.2 □□□
□□	121g
□□□□□	□/□/□□□□□□□□□□□□□□□
□□□□□	□/□/□□□□□□□□□□
□□	ABS□□
□□□□□□□□	□□□□/□□□□□□□□/□□□□□/□□□□/□□□□□/□□□□□□□

□	PDF / CAD / 3D
□□	□□□□□□□□□□□□DIY□□□□□□□□□

□□□ □□□□□□ □□□□□□□□□□□□□

1.□□□□□□□□□□□□□□□□□□□□

2.□□□□□□□□□□□□□□□□□□□□□□□□□□□□□□□□

3.□□□□□□□□□□□□□□□□□□□□□□

□□□□□□□□

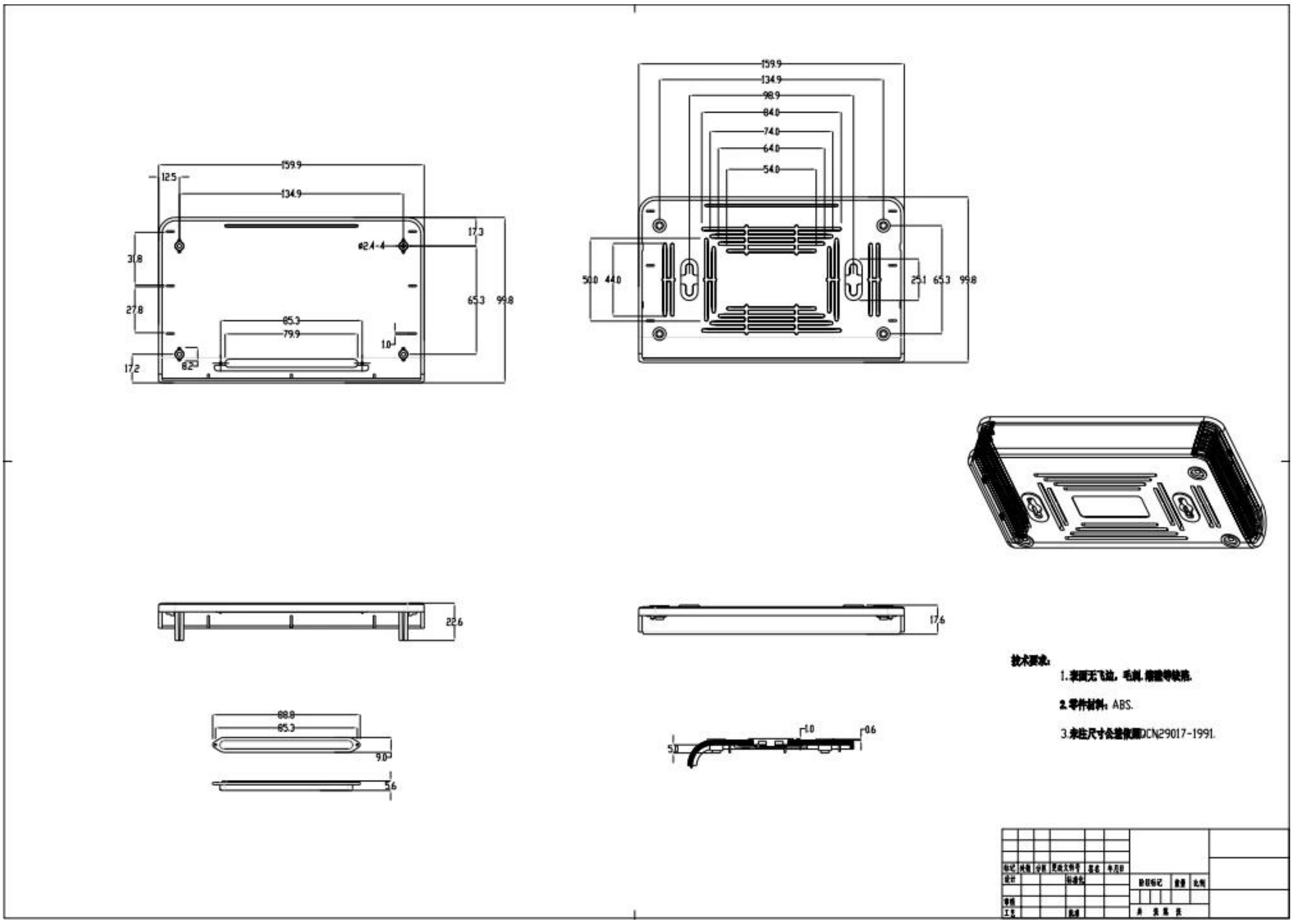

□□□□□□□□□□□□□□□□□□□□ □□□□□□□□ □□□□□□□□□□□□

1.□□□□□□□□□□□□□□□□□□□□□□□□□□□□□□□

MOQ□1□

2.We□DIY□□□□□□□□□□□□□□□□□□□□----- MOQ□20-50□

3.[illegible]PCB[illegible]

4.[illegible]STEP[illegible]

6.Customized[illegible]/[illegible]/[illegible]/ PVC[illegible]/[illegible]/[illegible]/[illegible]/[illegible]/[illegible]

[illegible]

[illegible]OMK ELECTRONICS CO[illegible]1[illegible]1000[illegible]

[illegible]

[illegible] [illegible] [illegible] [illegible]

[illegible]

1[illegible]

2[illegible]

3[illegible]

[illegible]

[illegible]	1-3[illegible]
[illegible]	3-10[illegible]
[illegible]	10-20[illegible]

[illegible]