□□ □□ □□ :

(1) □□□ □□ : □□, □□ (□□)
□ □□ □□ □□ : □□ □□ : 260mm, □ : 200mm □□ : 100mm .1000pcs / □□
3 □□ □□ □□ : □□□□□ 3~5□ □□ □
CE, UL, ROHS□ □□□ 4 □□ □□□ □□
□□ 5 □□□□ □□□□

□□

PCB □□□□ □□ □□□ □ □□ □□□ □□ □□ □□□□ □□□□□ □□ □□□ □□□□□□. □□□ 3.5, 3.81, 5.0, 5.08 □□□. □□□ 3P□ 2P□ □□ □ □□□. □□□□□ □□□ □□□□. □□ □□□ □□, □□, □□ □ □□ □□□ STYL □□□□□□□.

| Technical Parameters for Screw Terminal Block/Connector : | | |
|---|---|---|
| Electrical Specification | Mechanical Specification | Part & Material |
| Rated: 250V,16A | Temp.Range: -30C-+120 C | Body: PA66,UL94V-0 |
| Contact resistence: 20mΩ Max | Max Soldering: +250 C,5s | Screw: Steel,Zn plating |
| Insulation resistence: 5000MΩ Min | Wire range: 22-14AWG(2.5MM2) | Wire Protector: Bronze,Ni plating |
| Dielectric strength : 2000VAC min/60 seconds | Strip Length: 4.5 -5mm | Terminal: Brass,Tin plating |

# Pitch:

**5.0mm**

# Poles:

**2pole 3pole to any poles**

## SZOMK

- Top quality products with certification of CE,UL,ROHS
- Short lead time,normally 3-5 days after payment
- Prompt reponse for your inquiry

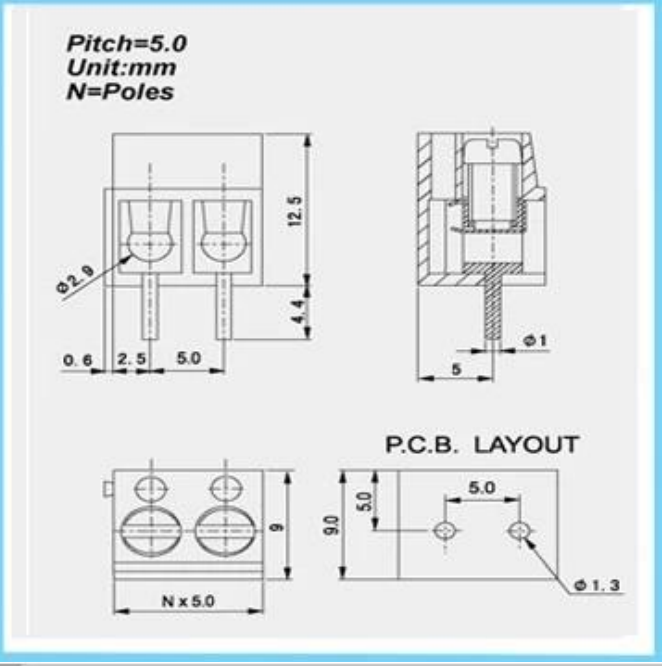


## Company Information

### Shenzhen Futian Huaqiang Electronic World OMK Electronic Sales Departmen

This complex,during long years of efforts with it's own experienced group and sole facilities for improvement of productions and promotion of products quality, is now one of the largest suppliers of all kinds of metallic and plastic enclosures in different fields of electronic,electrical,communication,medical,industrial and research prtojects purposes.

In today's industrial world and with the rapid development of all industries,the need of these products is sensed more than ever.Therefore by offering the best quality and service,we try to meet these needs and help you to reach your ideals.

## Certificate

## Exhibition

## Factory and showroom

## Packaging & Shipping

SZOMK
Shenzhen Futian Huaqiang Electronic World OMK
Electronic Sales Department
Tel: +86-755-83222882 E-mail: ivy@szomk.com.cn
HOME