□□□:

□□□ : □□, □□

□□ : platic □□ □□□□ □□ □□

□□ □□ : AK-H-60

□□ : 180 * 81 * 45mm

□□ : ABS □□

□□ MOQ : 1 □□

□□□□□□: □ □□, □□ □□□, □□, □□□, □□□ □□,
□□□ □□, □□ □□

□□□ □□□ □□□□ MOQ : 20 PC

□□ : □□

SZOMK
85g
AK-H-60
Enclosure Manufacturer
www.chinaenclosure.com

SZOMK

Customizable
cutout,sticker
silkscree,color

Weight: 85g

Size:180*81*45mm

Model No.AK-H-60

7*3.2*1.7inch

SZOMK
81
45
180
OK
F1
F2
F3
F4

SZOMK

SZOMK

SZOMK

SZOMK

SZOMK

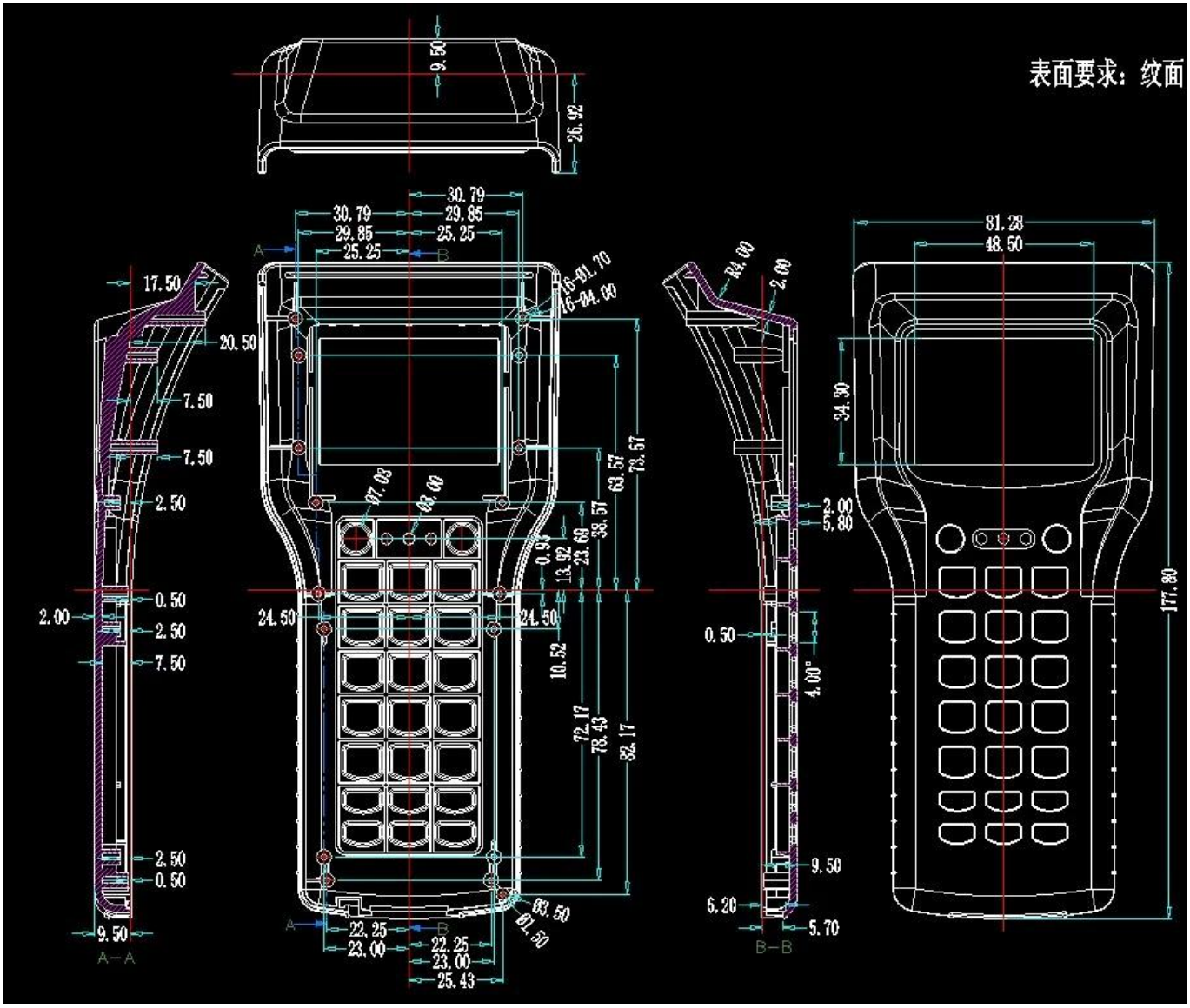
表面要求：纹面
9.50
26.92
30.79
29.85
25.25
17.50
20.50
7.50
2.50
0.50
2.00
9.50
A-A
16-Ø1.70
16-Ø4.00
Ø7.03
Ø3.00
63.57
73.57
38.57
23.69
13.92
0.93
24.50
10.52
72.17
78.43
82.17
Ø3.50
Ø1.50
22.25
23.00
25.43
R4.00
2.00
5.80
4.00°
6.20
5.70
B-B
81.28
48.50
34.30
177.80

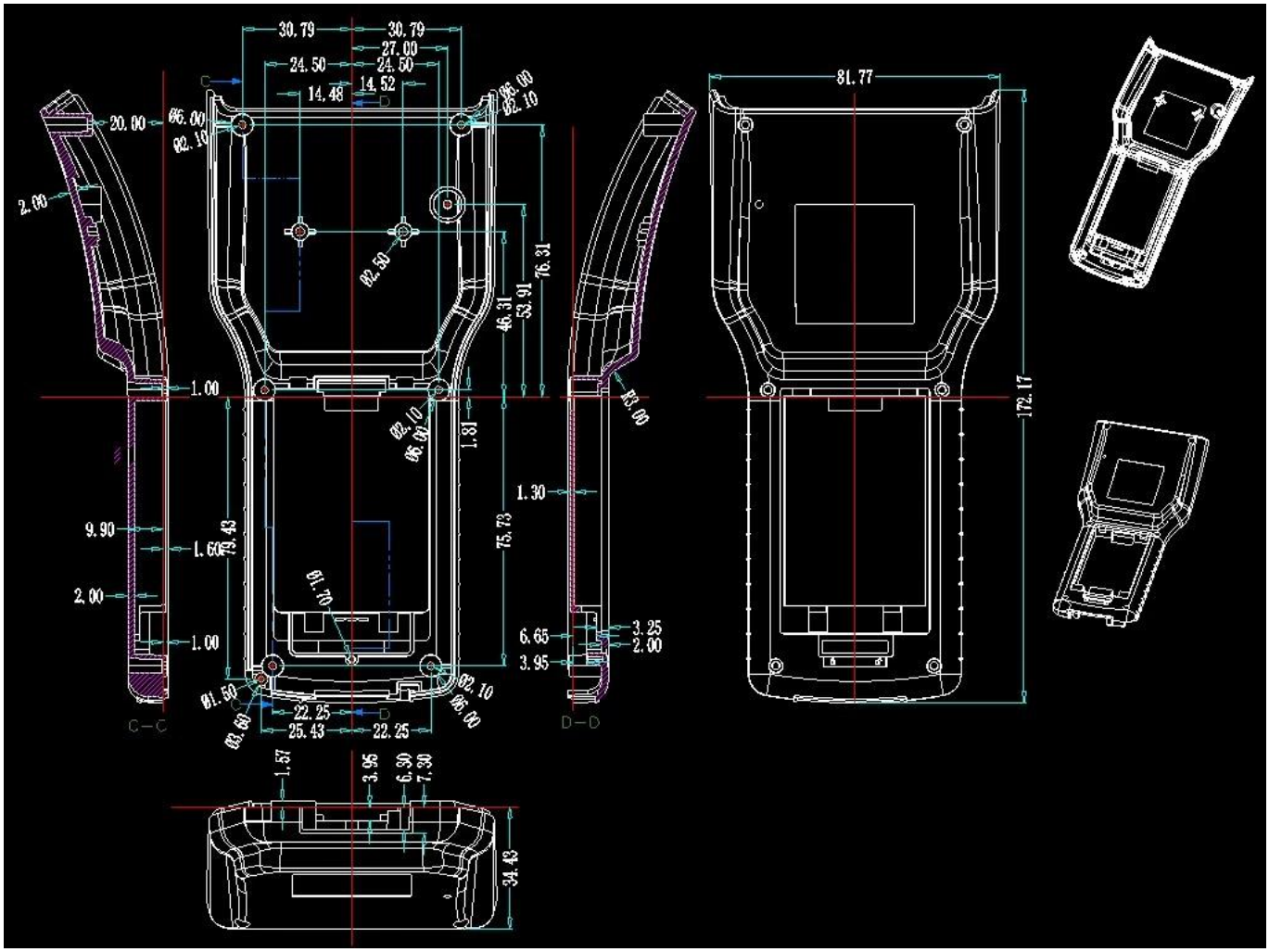

□□□ □□ □□□□□□□.

1, □□□□ □□ □□ 2, □□ □□ □□
3, □□ □□ 4, □□ □□
5, □□ □ □□ 6, □ □□
7, □ □ □□ 8, PVC □□
9, □□□ □ 10, □□ □□□ □□
11, □□□□ □□□. 12, □□□ □ □□□
13, □□ □□□□ 14, □□□ □□□
15, □□□ □□ 16, □□ □□

Silkscreen
Plate
Sticker
We can do customize
Cutout
Silicone Seals
Color

We can do customize

Cut holes
Silkscreen
Sticker

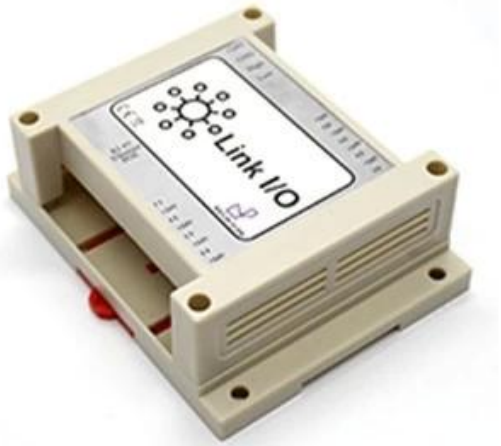

We can do customize

change the color	

We can do customize

PVC lable
Acrylic plate
Sticker

We can do customize

Cut holes
Silkscreen
Laser carve

We can do customize
UV
Protection

We can do customize

Cut holes
Silkscreen
Sticker

We can do customize
Polishing
Color

□□:
□□, □□, □□□, □□, □□ □□ □□, □□ □□□□, □□, □□ □□, □□□ □ □□ □□, □□ □□, □□ □□ □ □□□□□, □□□ □□ □□ □□ □□□□□.

It is widely used in electronic, instrumentation, automation, communications, power supply units, student projects, amplifiers, Medical and wellness devices, test and measurement equipment, industrial control, peripheral devices and interfaces, switch boxes.
GSM Smart Building

□□:

□□ □□ □□□□□ □□□ □□□□□ □ □ □□□ □□□ □□□ □ □ □□ □□□ □□ □□ □ □ 24 □□□□ □ □□□ □□□ □□ □□□. :-)

Company Information

Shenzhen Futian Huaqiang Electronic World OMK Electronic Sales Departmen

This complex,during long years of efforts with it's own experienced group and sole facilities for improvement of productions and promotion of products quality, is now one of the largest suppliers of all kinds of metallic and plastic enclosures in different fields of electronic,electrical,communication,medical,industrial and research prtojects purposes.

In today's industrial world and with the rapid development of all industries,the need of these products is sensed more than ever.Therefore by offering the best quality and service,we try to meet these needs and help you to reach your ideals.

Exhibition

Certificate

Factory and showroom

Packaging & Shipping

TNT sure we can · UPS WE LOGISTICS · SF EXPRESS 顺丰速运 · FedEx Express · EMS · DHL

PayPal · WESTERN UNION · VISA · ESCROW · MasterCard · HSBC

SZOMK

Shenzhen Futian Huaqiang Electronic World OMK
Electronic Sales Department

Tel: +86-755-83222882 E-mail: ivy@szomk.com.cn

HOME

SZOMK

Our packaging

Plastic foam packaging

Metal shell packaging

Plastic box packaging

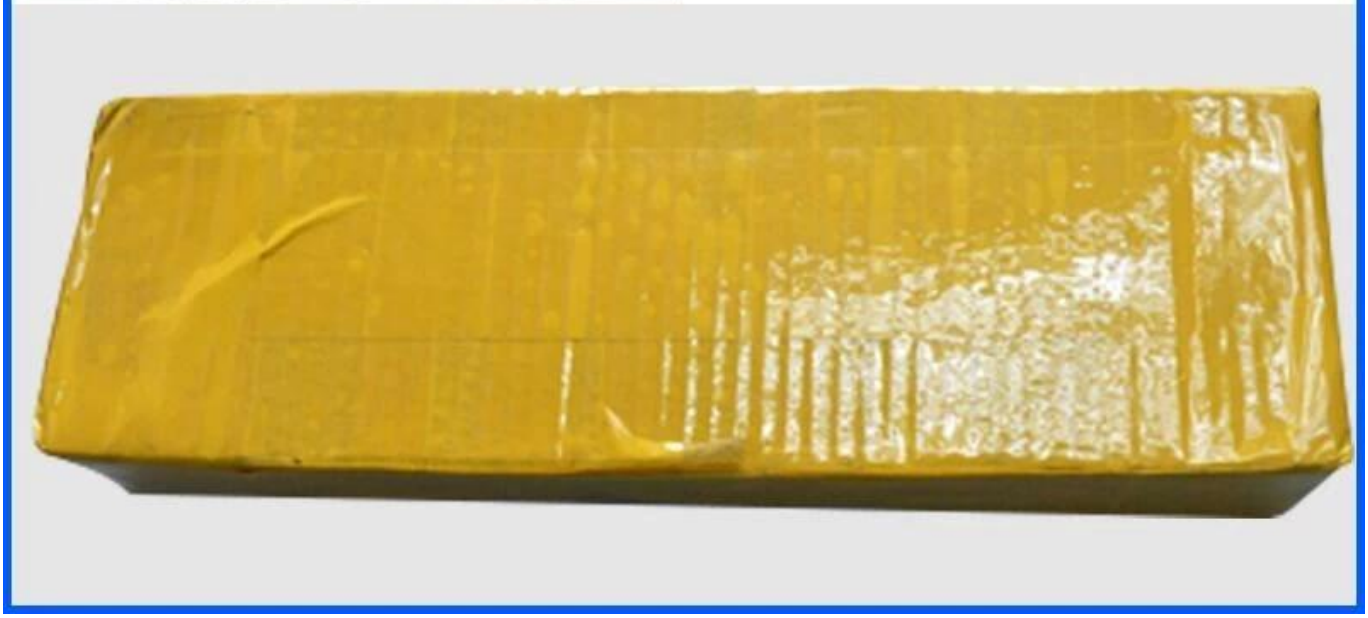

QQ 2033950667

Tel 81-755-83222882
+86 15361444713

Add 16-6Floor, 505Building, Shangbu In dustry Area,Hangtian RD,Futian District ,Shenzhen China

Email william@szomk.ent

Skype szomk-002

□□□ □□□ 24 □□ □□□ □□ □ □□□□. : o)