□□□ □□□□ □□□ □□□□ □ □□ □□□ □□□□□ :

1 □□□, □□ □ □□□ □□ □□□ □□□□ □□ □□□□□.
2 □□ □□□, □□□ □□□, □□□, □□.
3 □□ □□ □□, □□□□□ □□ □ 3-5 □ (□□□ □□)
4 □□□ □□ □□□ □□

□□ :

□□, □□, □□□, □□, □□ □□ □□, □□ □□□□, □□□, □□ □ □□ □□, □□□ □ □□ □□, □□ □□, □□ □□ □ □□□□□, □□□ □□□ □□ □□□□□.

□□□ □□□□ :

□□ □□□ □□ □□□ □□□ □□□□ □□ □□ □□□□□. □□□ □□□ 24 □□ □□□ □□□□ □□□ □□ □□□□!

□□ □□□□□ □□□ □ □□□□ :

SZOMK

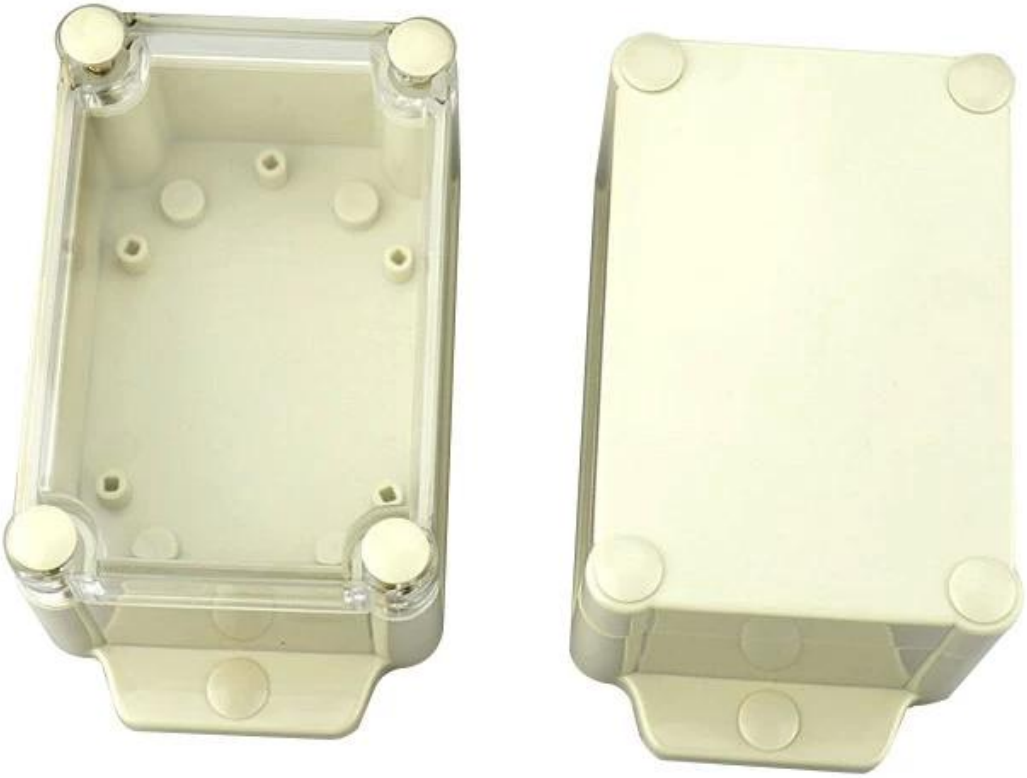

SZOMK

SZOMK

SZOMK

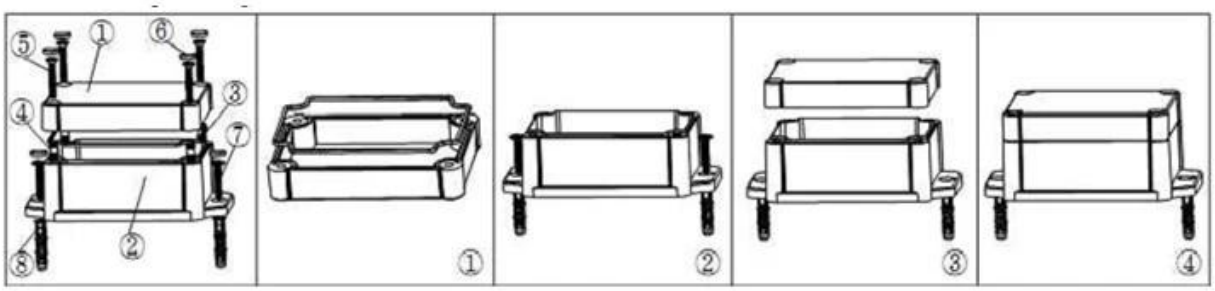

①

Epitheca (1PCS)
Material:ABS
Color:Light Grey(FS20412)

②

Hypotheca (1PCS)
Material:ABS
Color:Light Grey(FS20412)

Gasket (1PCS)
Material:Rubber

Copper Nut(6PCS)
Material:Copper
Standard:M4*10
Color:Copper

Grub Screw(6PCS)
Material:Stainless Steel
Standard:M4*25

Screw Lid(6PCS)
Material:ABS
Color:Light Grey(FS20412)

Self-Tapping Screw(4PCS)
Material:Iron
Standard:M4*30

Wall Nail(4PCS)
Material:PP
Color:Light Grey(CM906)

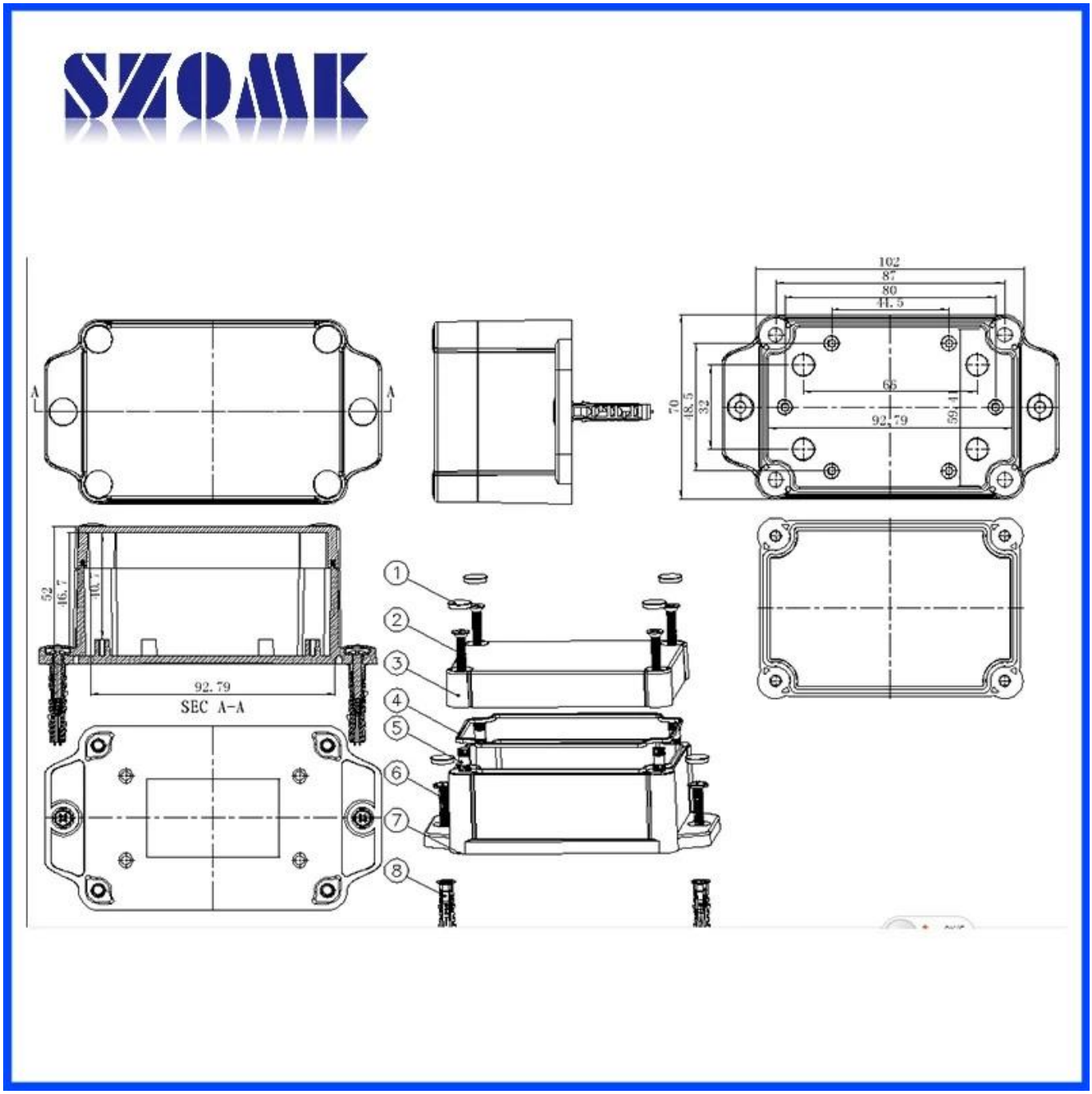
SZOMK
102
87
80
41.5
65
92.79
59.41
70
48.5
32
A
A
52
46.7
10.7
92.79
SEC A-A
1
2
3
4
5
6
7
8

□□ □□

T/T, WESTERN UNION, MONEY GRAM AND PAYPAL ACCPETED.

Skype: 86-13392896082

Tel: 86-13392896082

Email: kevin@chinaenclosure.com

Contact Us