□□□ □□ □□□□□□□.

1, □□□□ □□ □□

2, □□ □□ □□

3, □□ □□

4, □□ □□

5, □□ □ □□

6, □ □□

7, □ □ □□

8, PVC □□

9, □□□ □

10, □□ □□□ □□

11, □□□□ □□□.

12, □□□ □ □□□

13, □□ □□□□

14, □□□ □□□

15 □□□ □□

□□:

□□, □□, □□□, □□, □□ □□ □□, □□ □□□□, □□, □□ □□, □□□ □ □□ □□, □□ □□, □□ □□ □ □□□□□, □□□ □□ □□ □□ □□□□□.

□□:

□□ □□ □□□□□ □□□ □□□□□ □ □ □□□ □□□ □□□ □ □ □□ □□□ □□ □□ □ □ 24 □□□□ □□□□ □□□ □□ □□□. :-)

SZOMK

Customizable
Cutout,sticker
Silkscreen,color

Weight :12 g
Model No. AK-S-74

Size:2.0*1.42*0.59 inch
51*36*15 mm

SZOMK

SZOMK

SZOMK

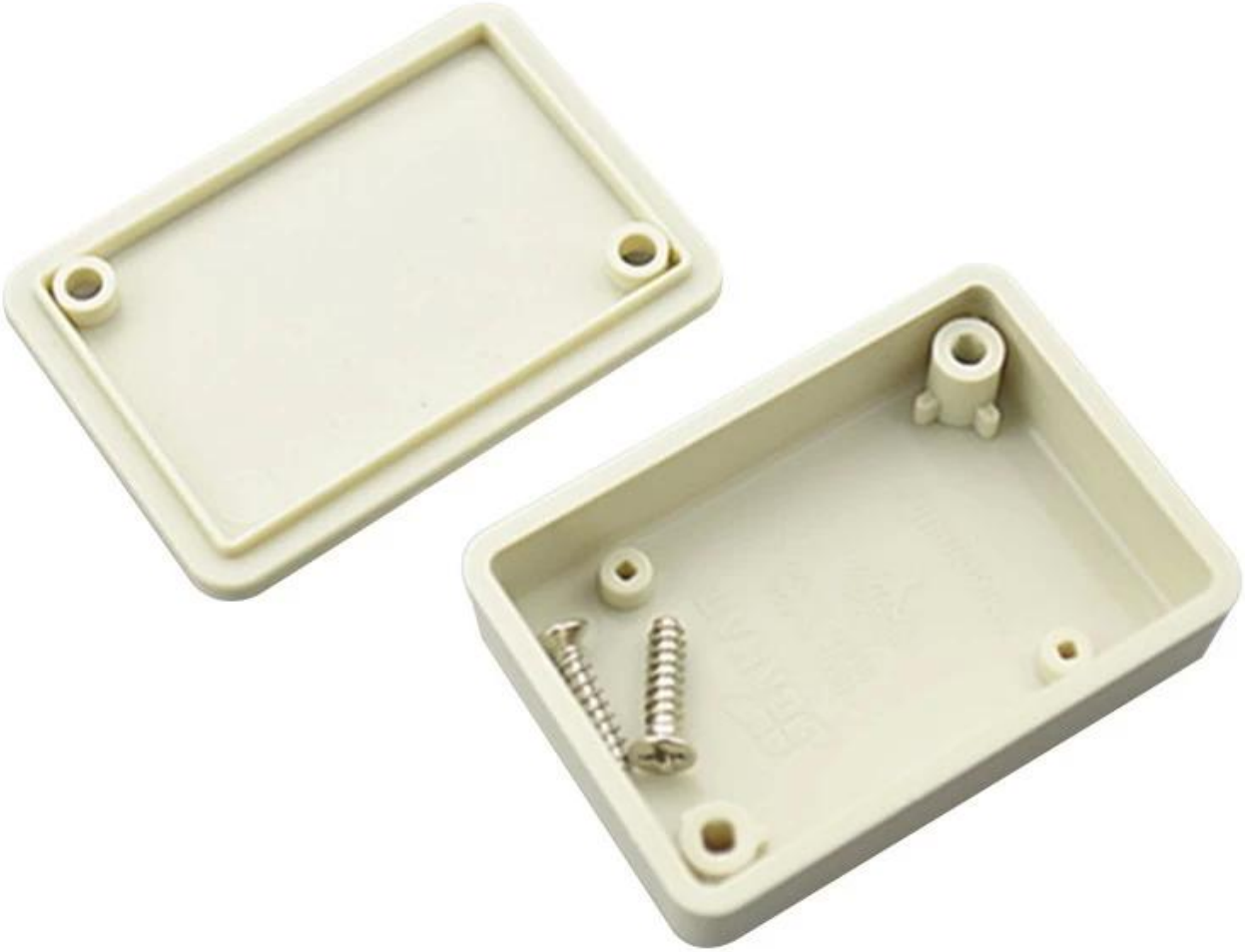

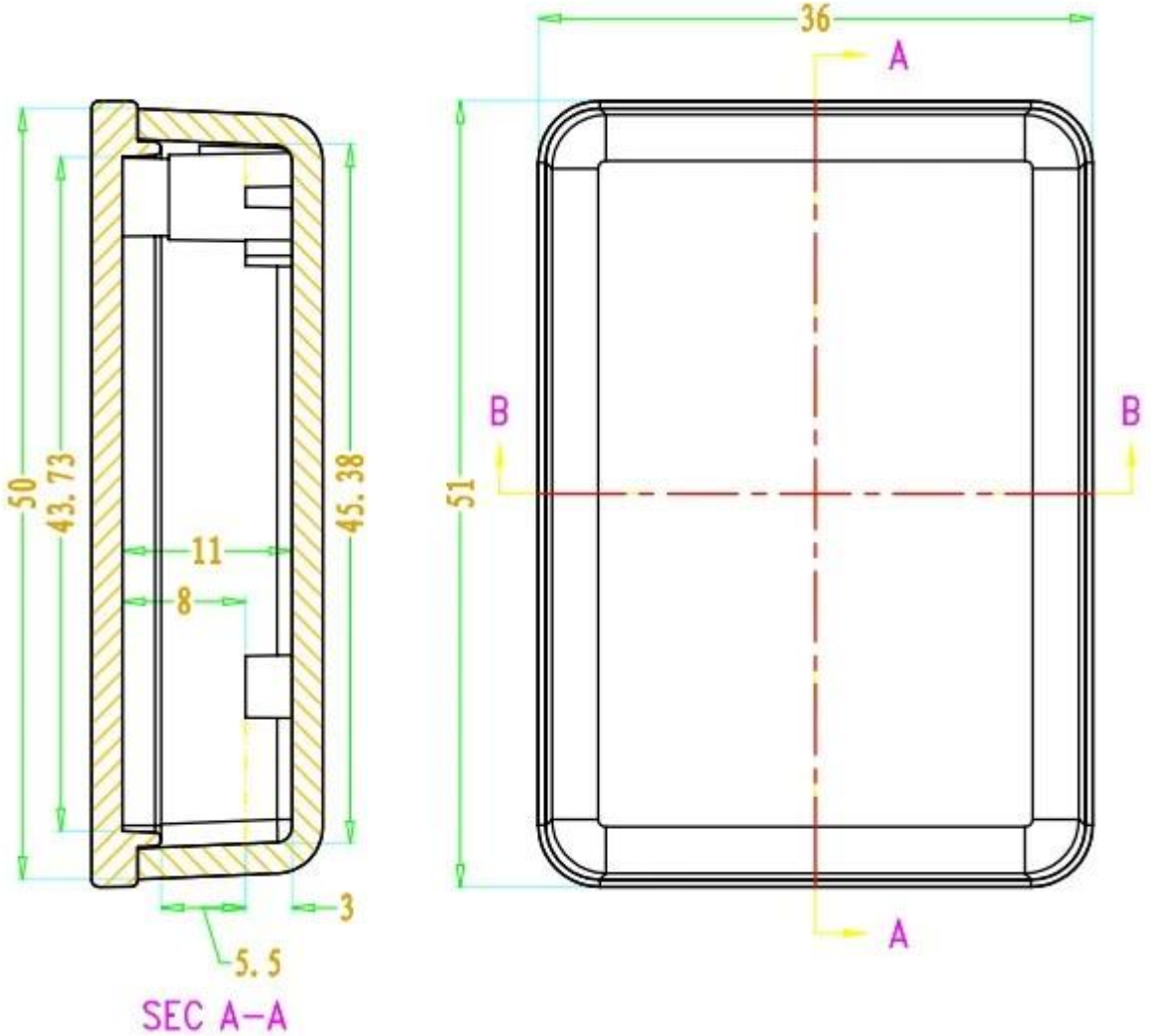
36
A
B
B
A
50
43.73
45.38
51
11
8
3
5.5
SEC A-A

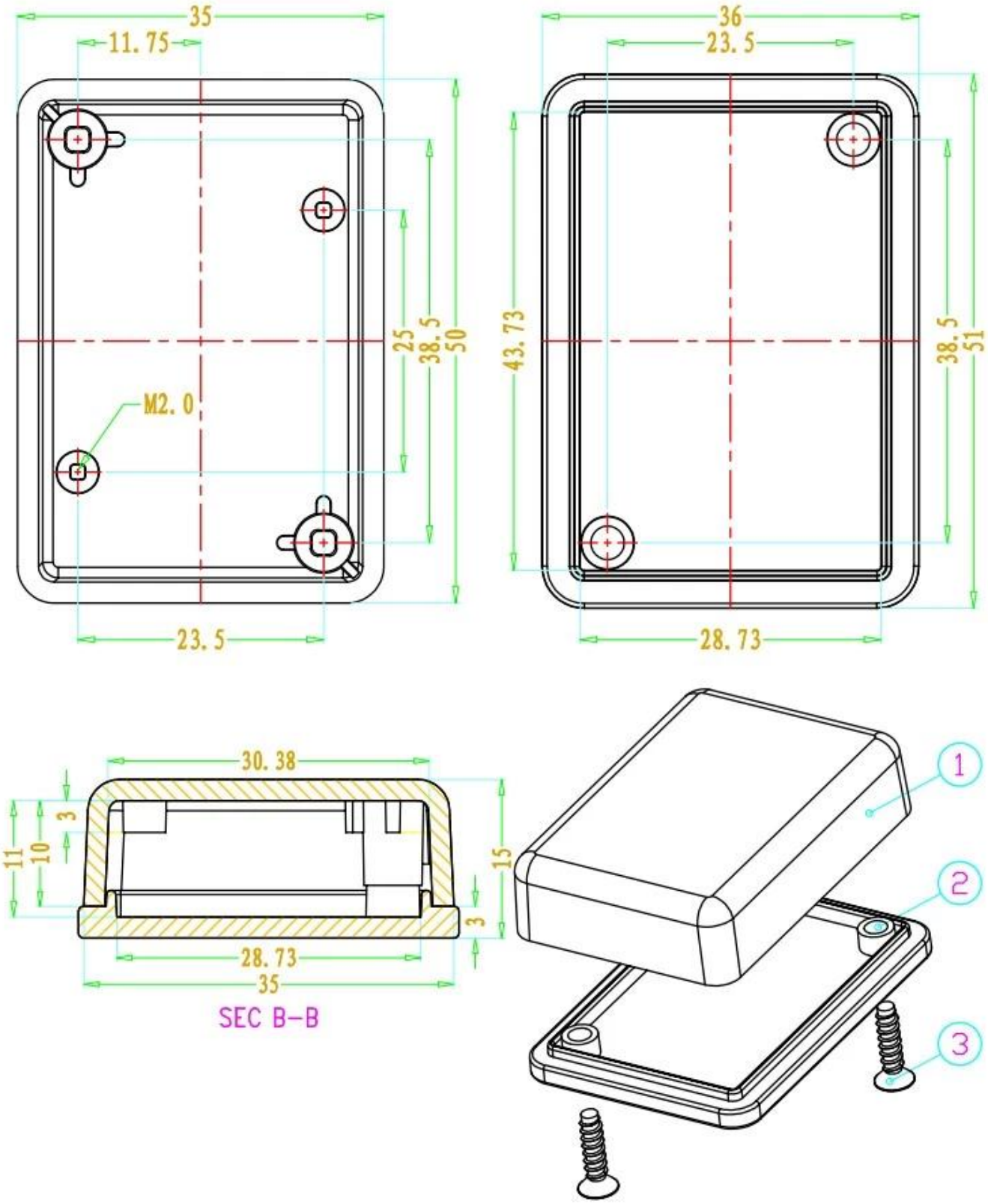
35
11.75
25
38.5
50
M2.0
23.5
36
23.5
43.73
38.5
51
28.73
30.38
3
11
10
15
3
28.73
35
SEC B-B
1
2
3

QQ 2110283100

Tel 81-755-83222882
+86 18819074698

Add 16-6Floor, 505Building ,Shangbu Industry Area,Hangtian RD,Futian District ,Shenzhen China

Email teddy@szomk.net

skype teddy@szomk.net

WeChat teddy07277