Suitable for IoT device, data transmitter and receiver, access point.

SzomkThe cases are used in various sectors and fields, that is to say as an IoT network enclosure, sensor fence, custody for built -in PC, enclosure of the instrument,
Industrial control box, junction box, distribution box, audio amplifier frame and so on.
Choose from a wide range of about 2,000 publicArticles and without quantity requirements, you can simply buy from 1 piece onwards!

OEM Service

cut out
Silkscreen Printing/ Pad Printing
laser engraving
UV print
label
membrane keyboard
acrylic plate
oil painting
Plastic electroplaint
Hot treatment
Custom PC plate
Plastic cnc
Ultrasound welding
RFI/EMI SHIELDING coating
UL94-V0 edit material, flame delay, high temperature delayer

3D printing (RDM/SLS/SLS/FSM)
Empty casting
IndustrialEngineeringDrawing Andtools
Moq:30PC

Application

*** USB Power Charging Hub + Data Hub**
*** USB HEMODYNAMIC RESEARCH DEVICE**
*** WiFi Access Point**
*** WIRELESS HOME ELECTRONICS CONTROLLER**
*** ADVANCED TRIGGER STATION**
*** G4 FLIGHT TRACKER**
*** GSM MODULE**
*** IOT and SENSOR**
*** NETWORK TRAINING SYSTEM**
*** COMMUNICATION UNIT with SENSOR**
*** WIRELESS NETWORK DATA LOGGER**
*** FLANGED NETWORK PLASTIC BOX**

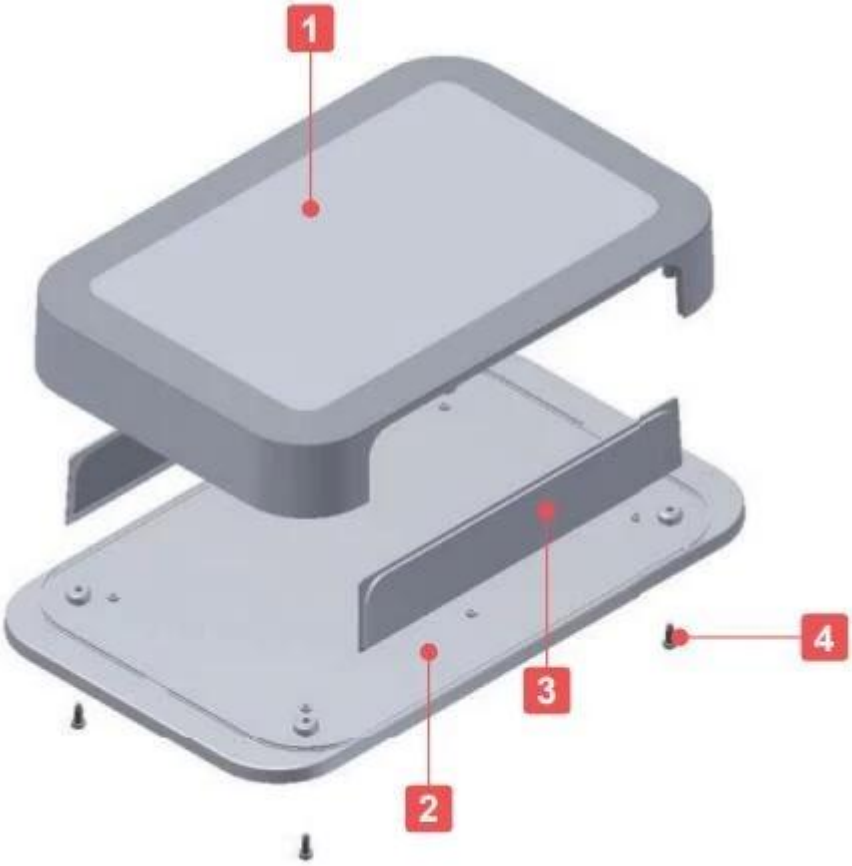
1
2
3
4

SZOMK

124*67*34mm

66g

AK-W-66

SZOMK

124*67*34mm

66g

AK-W-66

SZOMK

124*67*34mm

66g

AK-W-66

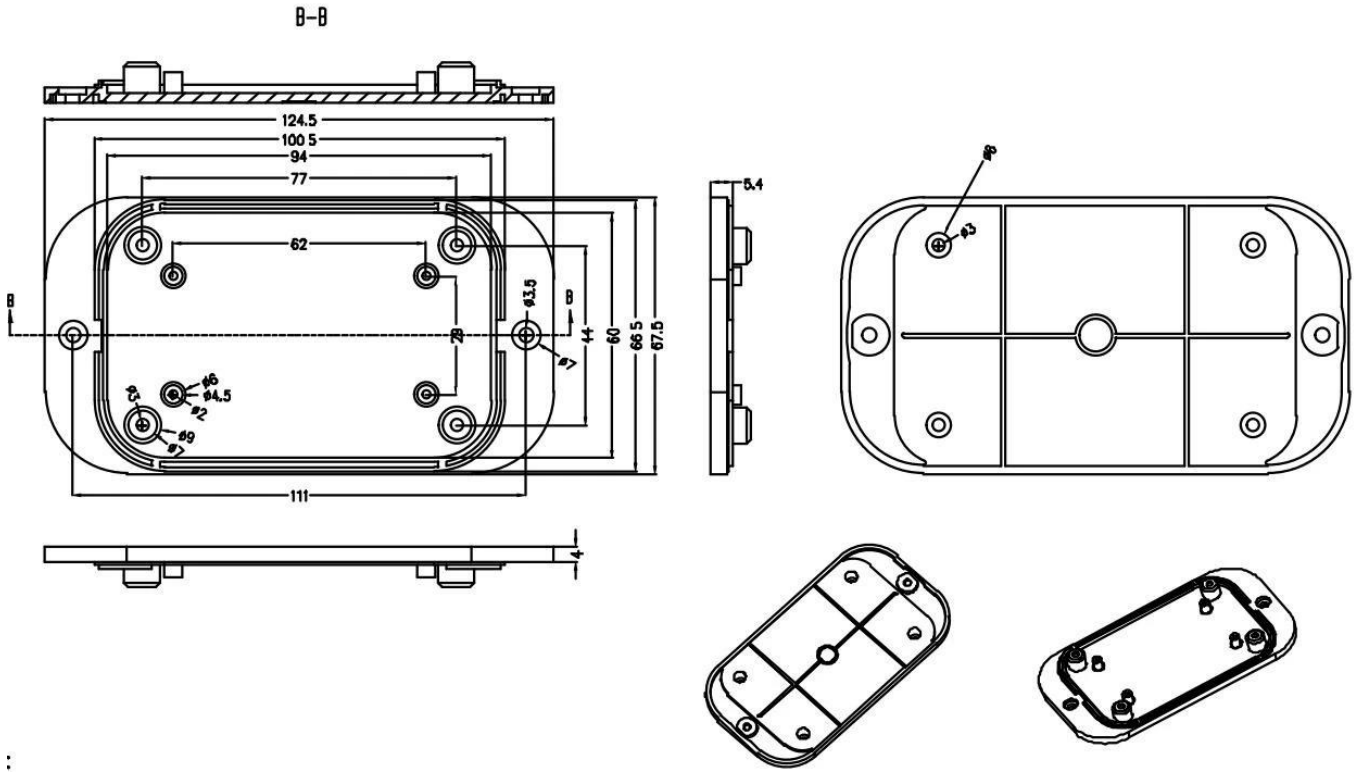
B-B
124.5
100.5
94
77
62
B
B
ø3.5
28
44
60
66.5
67.5
ø7
ø6
ø4.5
ø2
ø3
ø9
ø7
111
4
5.4
ø8
ø3