Specifications of Aluminum enclosure

Type	**wall mounting aluminum enclosure**
Brand	**SZOMK**
Material	**aluminum**
Model No.	**AK-C-B44**
Size	**30(H)*80(W)xfree mm**
Color	**Sliever colors can be customized**
MOQ	**20 pieces**
Protect level	**IP54**
Lead time	**7-15 days after get payment**
Normal packing	**Carton and plastic foam and tape packaging**

Advantages of enclosure

1. Has a strong resistance to abrasion, weathering, corrosion.
2. Can be formed on the surface of a variety of colors, to maximize fit your requirements.
3. Have a strong hardness, can be well protected your electronics.

What we can do for you

1Drilling,Punching ,etc.Welcome to provide drawings custom.
2 Powder Coating ,Brush, Polish,Silkscreen,Laser Carve, Sticker,Engraving,Acrylic Sheet.
3 Short lead time,normally 3-5 days after payment(according to quantity)
4 Prompt response for your inquiry

Here are more details about the pictures

SZOMK

Customizable
Cutout,sticker
Silkscreen,color

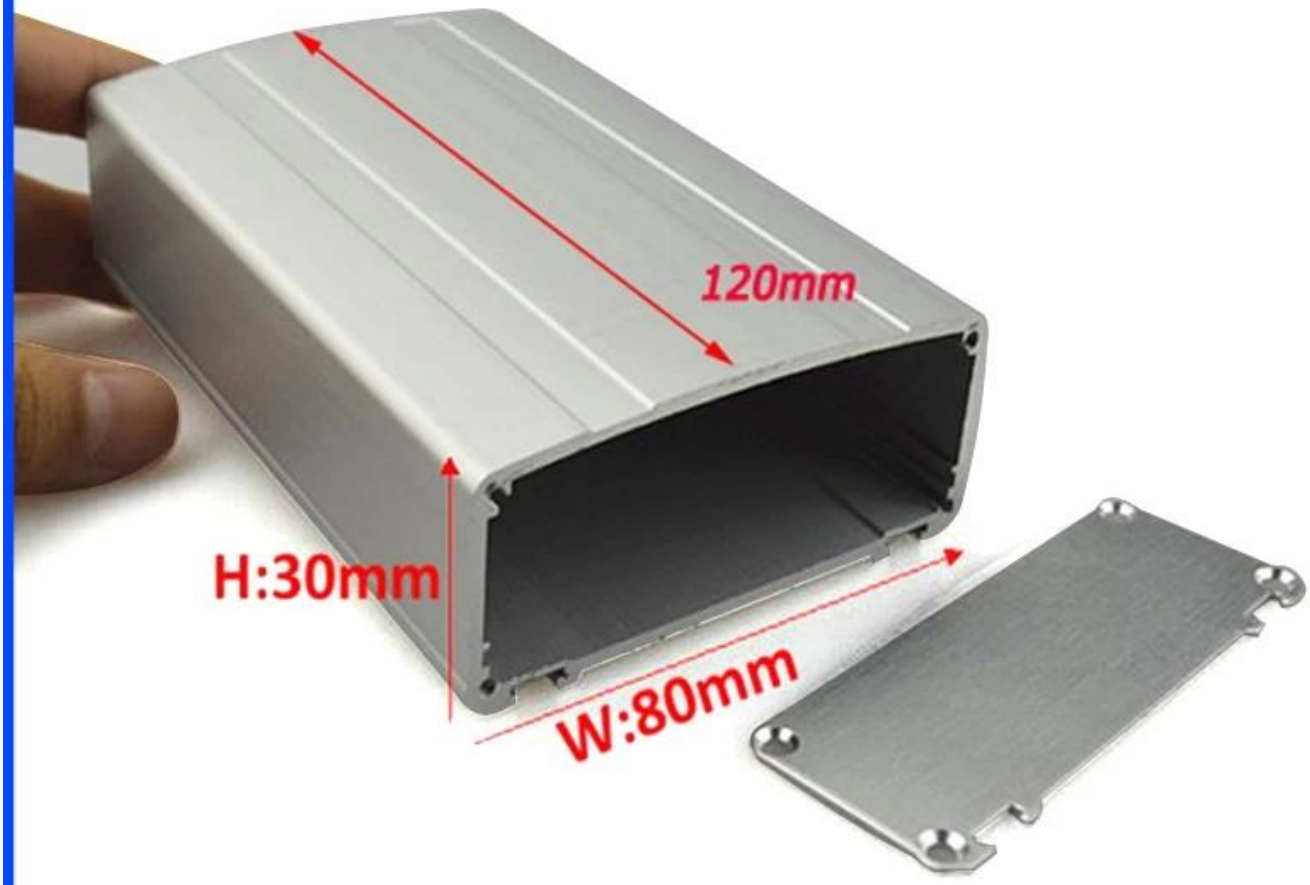

Weight :150 g
Model No.AK-C-B44

Size:1.18*3.15*4.72 inch
30*80*120 mm

SZOMK
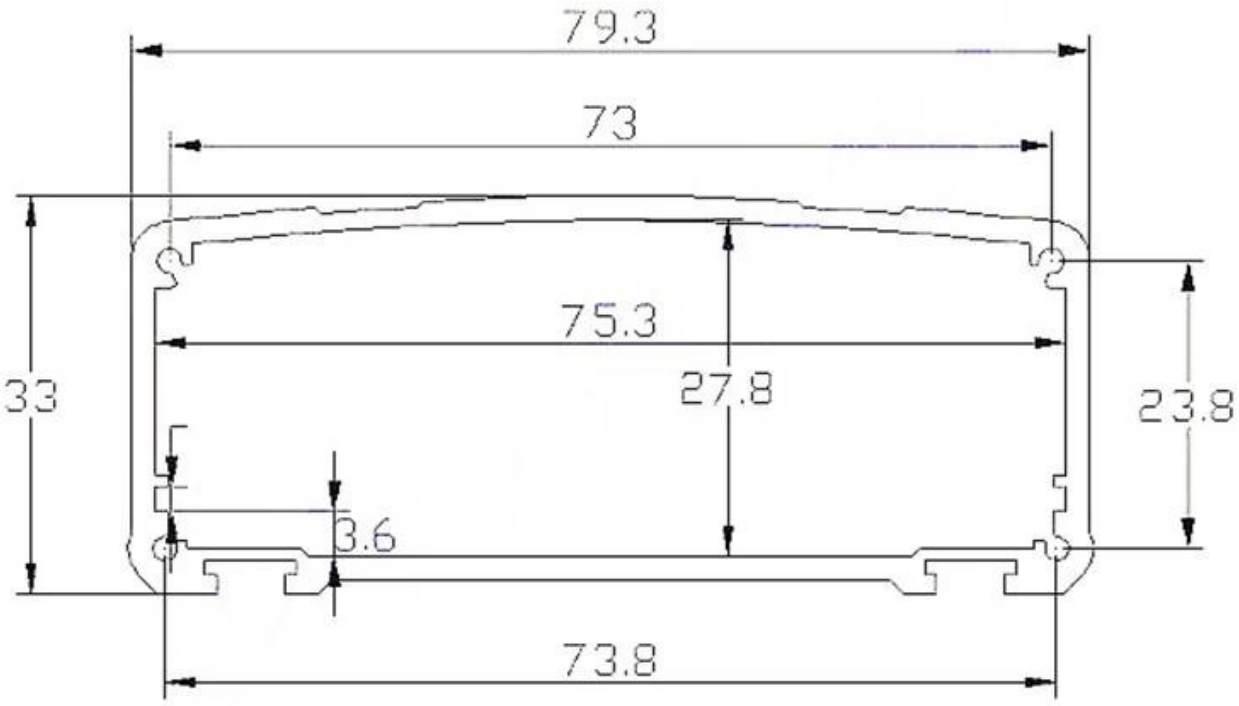
SZOMK