Product characteristics

1, products with packaging box, independent packing.
2, matching with screw convenient (client).
3, with slip-resistant floor mat.
4, shell have the relative independent panel, to facilitate the relevant client the processing openings.
5, all small packaging bag packing.
6, products material is plastic raw material

Main usage

Desktop instrument box because and focalization geographic disparities to the scope of different names different also used for industrial main junction box, instrument box, electronic housings, etc mainly for indoor and outdoor electric, communication, fire fighting facilities, steel puddling, electronic, power, railway, construction site, stopcocks, airport, guesthouses, large factory, environmental pollution.

Services and machining:

1.Developing molds and its machining
2.Modification of the product and its machining
3.The material and color of the products can be modified as required.
4.Additional costs are added for modification and machining depending on the mould.
5.Professional machines for punching the Enclosure

SZOMK

Enclosure Manufacturer

www.chinaenclosure.com

SZOMK

SZOMK

AK-D-22

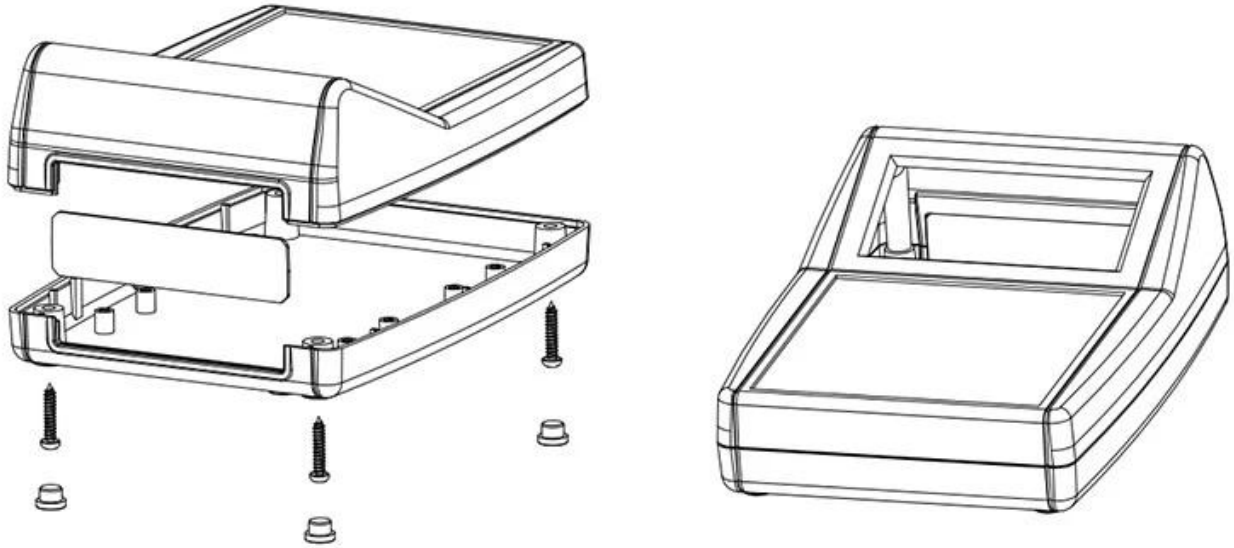

SZOMK

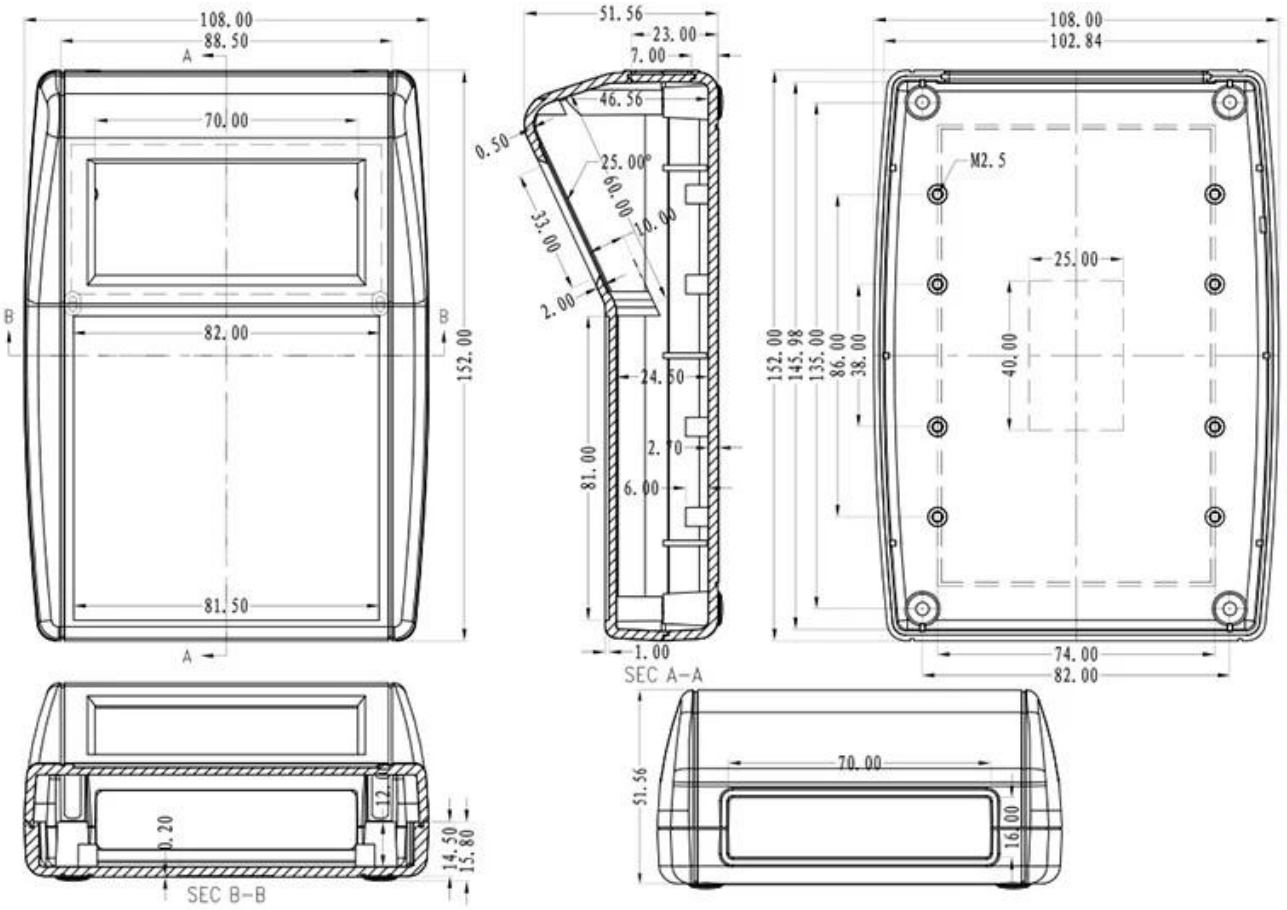
108.00
88.50
A
70.00
B
82.00
B
152.00
81.50
A
51.56
23.00
7.00
46.56
0.50
25.00°
60.00
10.00
33.00
2.00
24.50
2.70
81.00
6.00
1.00
SEC A-A
108.00
102.84
M2.5
25.00
40.00
152.00
145.98
135.00
86.00
38.00
74.00
82.00
0.20
12.0
14.50
15.80
SEC B-B
70.00
51.56
16.00

QQ 2406659781

Tel 86-755-83222882
86-18598241813

Add 628Room,505 Building ,Shangbu industry, Hangtian road ,Futian district ,Shenzhen, China,518031

Email emily@szomk.com.cn

skype szomk1010