Features:

1, the product has a separate boxes and cartons.
2, the wall and the shell wall screw, the decorative sheet (grinding screw position).
3, with a simple (client) to match the screw
4, all of pouch packaging.
5, the product is made of a plastic material
6, respectively, according to their needs and drilling.

Main purpose:

In the wall-mounted meter boxes and geographical differences in the different names are used for different industrial main junction boxes, meter boxes, electronic products, such as Shell, is mainly used for indoor and outdoor electrical, communications, fire fighting equipment, iron, electronics, electricity, railways, construction sites, cocks, airports, hotels, large factories, pollution range.

Customization service we offer

1, cutout / cut holes
2, Silk screen / Print Logo
3, Sticker
4, Make new abrasives
5, Change color

SZOMK

Enclosure Manufacturer

www.chinaenclosure.com

SZOMK

SZOMK
15MM

SZOMK

SZOMK

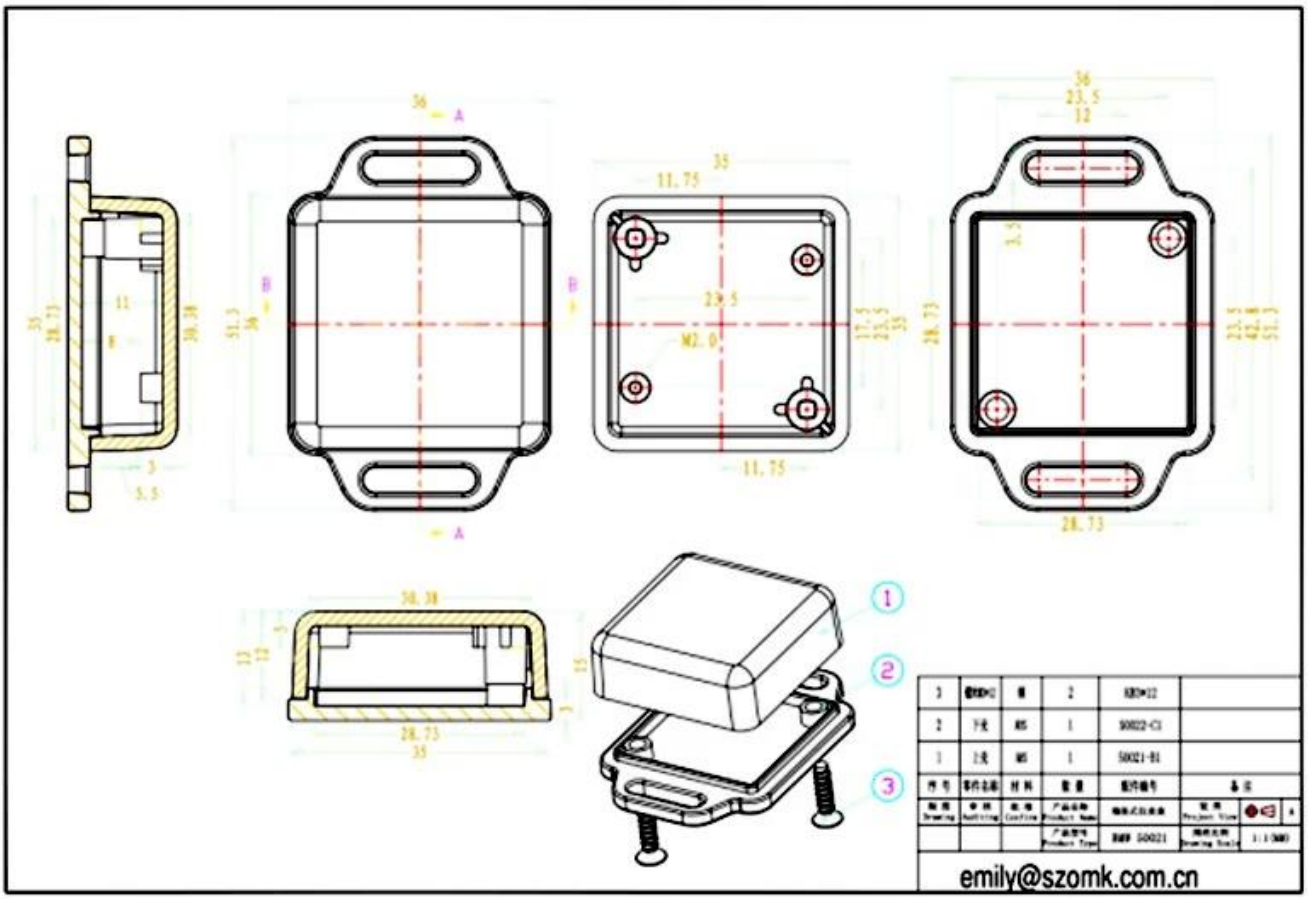

36
A
35
11.75
23.5
M2.0
17.5
23.5
35
11.75
36
23.5
12
3.5
28.73
23.5
42.8
51.3
28.73
30.38
11
8
3
5.5
51.3
36
B
B
A
30.38
13
12
5
15
3
28.73
35
1
2
3
emily@szomk.com.cn

QQ 2406659781

Tel 86-755-83222882
86-18598241813

Add 628Room,505 Building ,Shangbu industry, Hangtian road ,Futian district ,Shenzhen, China,518031

Email emily@szomk.com.cn

skype szomk1010