SZOMK

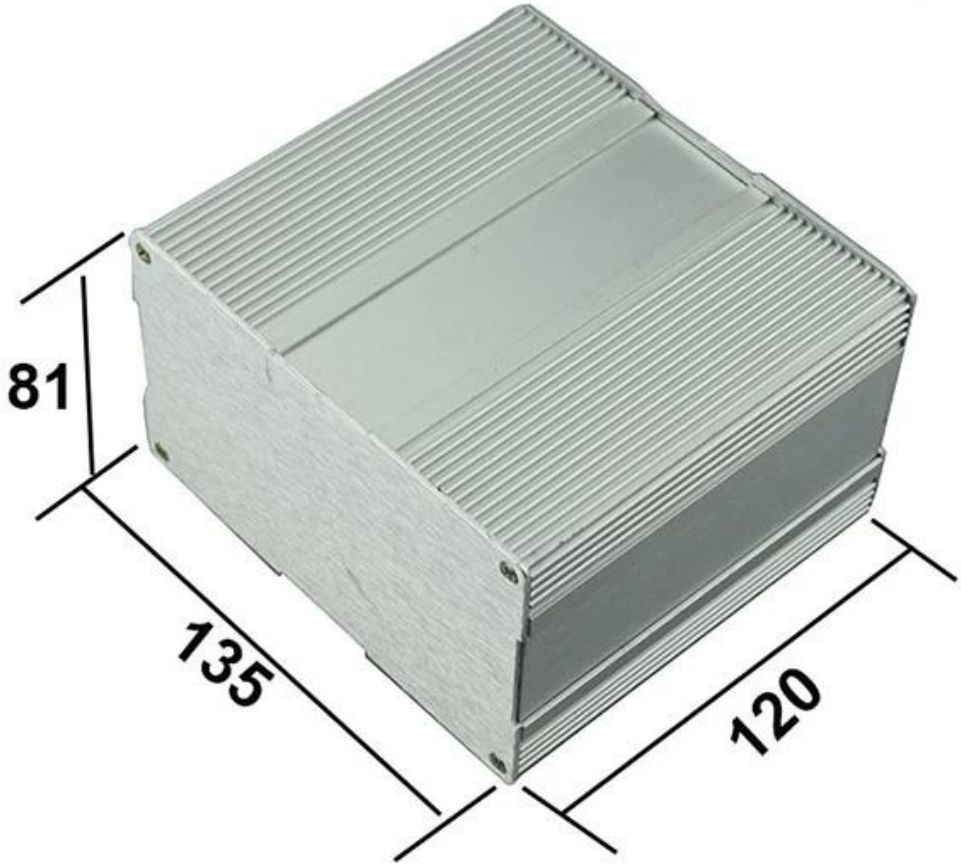


Enclosure Manufacturer

www.chinaenclosure.com

SZOMK

Customizable
cutout, sticker
silkscreen, color

Weight: 510g
Model No.AK-C-C53

Size: 3.19*5.31*4.72 inch
81*135*120 mm

# SZOMK

SZOMK

# Wall-mounting series

## Size List:HxWxfree(mm)

Length can be random

| | | | |
|---|---|---|---|
| AK-C-A1 | 36x147 | AK-C-A17 | 40.5x97 |
| AK-C-A2 | 41x147 | AK-C-A18 | 80x234 |
| AK-C-A3 | 29x129 | AK-C-A19 | 40x80.5 |
| AK-C-A4 | 28x104 | AK-C-A20 | 33x105 |
| AK-C-A5 | 32x155 | AK-C-A21 | 39x96 |
| AK-C-A6 | 71x190 | AK-C-A22 | 24x76 |
| AK-C-A7 | 46x190 | AK-C-A23 | 58x180 |
| AK-C-A8 | 38x88 | AK-C-A24 | 29x164 |
| AK-C-A9 | 48x204 | AK-C-A25 | 61x147 |
| AK-C-A10 | 38x150 | AK-C-A26 | 35x120 |
| AK-C-A11 | 55x150 | AK-C-A27 | 36x85 |
| AK-C-A12 | 45x138 | AK-C-A28 | 28x165 |
| AK-C-A13 | 55x147 | AK-C-A29 | 52x165 |
| AK-C-A14 | 30x67 | AK-C-A30 | 33.5x103 |
| AK-C-A15 | 73.5x250 | AK-C-A31 | 39x144 |
| AK-C-A16 | 24x80 | AK-C-A32 | 26x66 |

# Nomal series

## Size List:HxWxfree(mm)

Length can be random

| | |
|---|---|
| AK-C-B1 | 45x70 |
| AK-C-B2 | 23x44 |
| AK-C-B3 | 43x66 |
| AK-C-B4 | 24x64 |
| AK-C-B5 | 27x66 |
| AK-C-B6 | 28x58 |
| AK-C-B7 | 25x40 |
| AK-C-B8 | 20x54 |
| AK-C-B9 | 44x80 |
| AK-C-B10 | 19x52 |
| AK-C-B11 | 22x104 |
| AK-C-B12 | 38x63.5 |
| AK-C-B13 | 33x70 |
| AK-C-B14 | 32x23 |
| AK-C-B15 | 29x75 |
| AK-C-B16 | 25x82 |
| AK-C-B17 | 35x65 |
| AK-C-B18 | 39x80 |
| AK-C-B19 | 29x67 |
| AK-C-B20 | 27x142.5 |
| AK-C-B21 | 28.8x82.8 |
| AK-C-B22 | 45x122 |
| AK-C-B23 | 32x82 |
| AK-C-B24 | 40x157 |
| AK-C-B25 | 32x138.5 |
| AK-C-B26 | 25x66 |
| AK-C-B27 | 24x70 |
| AK-C-B28 | 19x45 |
| AK-C-B29 | 22x55 |
| AK-C-B30 | 25x64 |
| AK-C-B31 | 29x46 |
| AK-C-B32 | 47x88 |
| AK-C-B33 | 35x80 |
| AK-C-B34 | 28x84 |
| AK-C-B35 | 27.5x66.2 |
| AK-C-B36 | 47x132 |
| AK-C-B37 | 25x58 |
| AK-C-B38 | 22.4x61 |
| AK-C-B39 | 30.5x72 |
| AK-C-B40 | 27.5x81 |
| AK-C-B41 | 26x108 |
| AK-C-B42 | 40x93 |
| AK-C-B43 | 45x240 |
| AK-C-B44 | 30x80 |
| AK-C-B45 | 42.7x65.8 |
| AK-C-B46 | 33x61 |
| AK-C-B47 | 45.2x70.8 |
| AK-C-B48 | 30x79 |
| AK-C-B49 | 24x58 |
| AK-C-B50 | 35x90 |
| AK-C-B51 | 20x65 |
| AK-C-B52 | 22.5x43.5 |
| AK-C-B53 | 48x100 |
| AK-C-B54 | 30x55 |
| AK-C-B55 | 40x50 |
| AK-C-B56 | 56x75 |
| AK-C-B57 | 23.5x64 |
| AK-C-B58 | 42.5x68 |
| AK-C-B59 | 23.5x101.2 |
| AK-C-B60 | 33x79.2 |
| AK-C-B61 | 45x60 |
| AK-C-B62 | 35x70 |
| AK-C-B63 | 46x66 |
| AK-C-B64 | 28x122.3 |

# Seperated style series

## Size List:HxWxfree(mm)

Length can be random

| | | | |
|---|---|---|---|
| AK-C-C1 | 40x97 | AK-C-C32 | 26.5x76 |
| AK-C-C2 | 25x98 | AK-C-C33 | 38x91 |
| AK-C-C3 | 32x82 | AK-C-C34 | 74x90 |
| AK-C-C4 | 26x26 | AK-C-C35 | 59x90 |
| AK-C-C5 | 50x205 | AK-C-C36 | 83x120 |
| AK-C-C6 | 36x76 | AK-C-C37 | 33x96 |
| AK-C-C7 | 20x50 | AK-C-C38 | 103x120 |
| AK-C-C8 | 38x52 | AK-C-C39 | 70x120 |
| AK-C-C9 | 46x76 | AK-C-C40 | 50x91 |
| AK-C-C10 | 63x120 | AK-C-C41 | 44x90 |
| AK-C-C11 | 33x11 | AK-C-C42 | 49x120 |
| AK-C-C12 | 55x106 | AK-C-C43 | 57x76 |
| AK-C-C13 | 38x88 | AK-C-C44 | 35x120 |
| AK-C-C14 | 30x105 | AK-C-C45 | 64x136 |
| AK-C-C15 | 26x71 | AK-C-C46 | 44x100 |
| AK-C-C16 | 25x40 | AK-C-C47 | 60x82 |
| AK-C-C17 | 45.5x96 | AK-C-C48 | 25x25 |
| AK-C-C18 | 45x122 | AK-C-C49 | 88x167 |
| AK-C-C19 | 45x152 | AK-C-C50 | 50x178 |
| AK-C-C20 | 47x107 | AK-C-C51 | 61x115 |
| AK-C-C21 | 51x125 | AK-C-C52 | 101x155 |
| AK-C-C22 | 54x145 | AK-C-C53 | 81x135 |
| AK-C-C23 | 54x168 | AK-C-C54 | 122x175 |
| AK-C-C24 | 82x145 | AK-C-C55 | 55x95 |
| AK-C-C25 | 68x145 | AK-C-C56 | 22x65.2 |
| AK-C-C26 | 56x96 | AK-C-C57 | 38x61 |
| AK-C-C27 | 90x90 | AK-C-C58 | 49x61 |
| AK-C-C28 | 50x110 | AK-C-C59 | 68x65 |
| AK-C-C29 | 30x88 | AK-C-C60 | 45x61 |
| AK-C-C30 | 29x90 | AK-C-C61 | 15.2x67.3 |
| AK-C-C31 | 48x91 | AK-C-C62 | 26x78 |

Silkscreen
Plate
Sticker
We can do customize
Cutout
Silicone Seals
Color

SZOMK

# Our packaging

Plastic foam packaging

Metal shell packaging
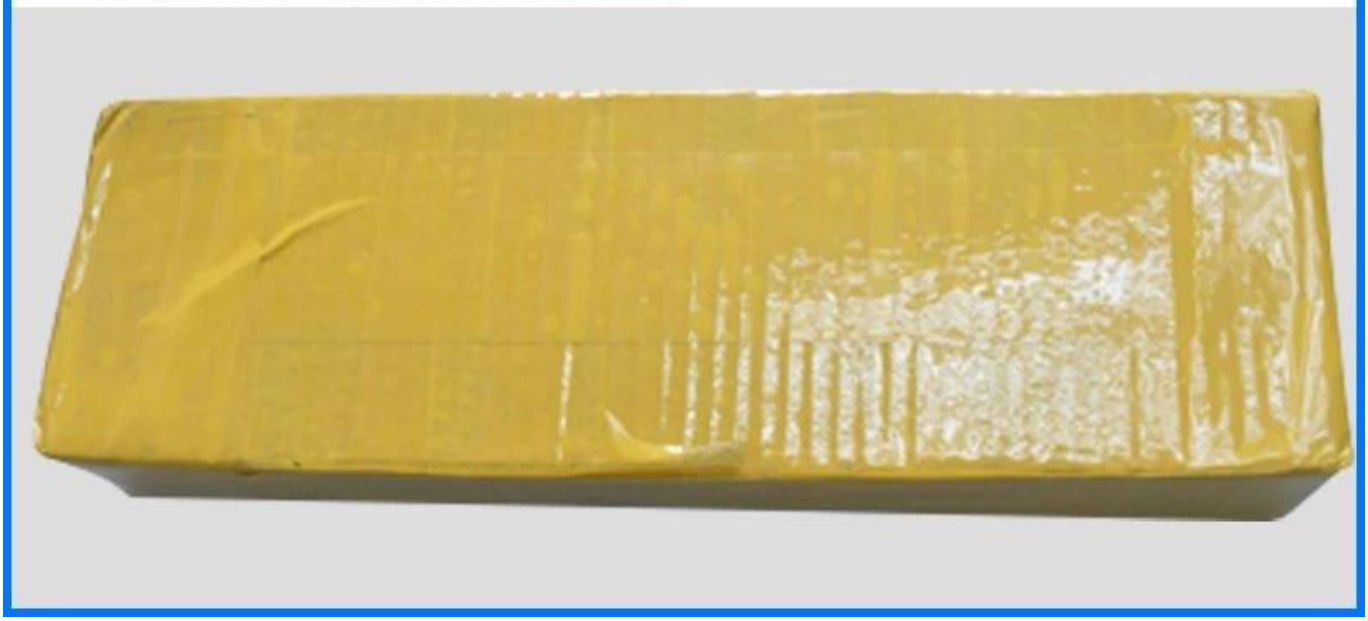
Plastic box packaging