## Быстрые данные

Номер модели: AK-DR-19
Внешний размер: 200x90x70мм
Белый цвет
Материал: ABS
Вес: 156г

SZOMK

Customizable
cutout, sticker
silkscreen, color

Weight: 155g
Model No.AK-DR-19

Size: 7.87*3.54*2.76 inch
200*90*70 mm

SZOMK

# SZOMK

SZOMK

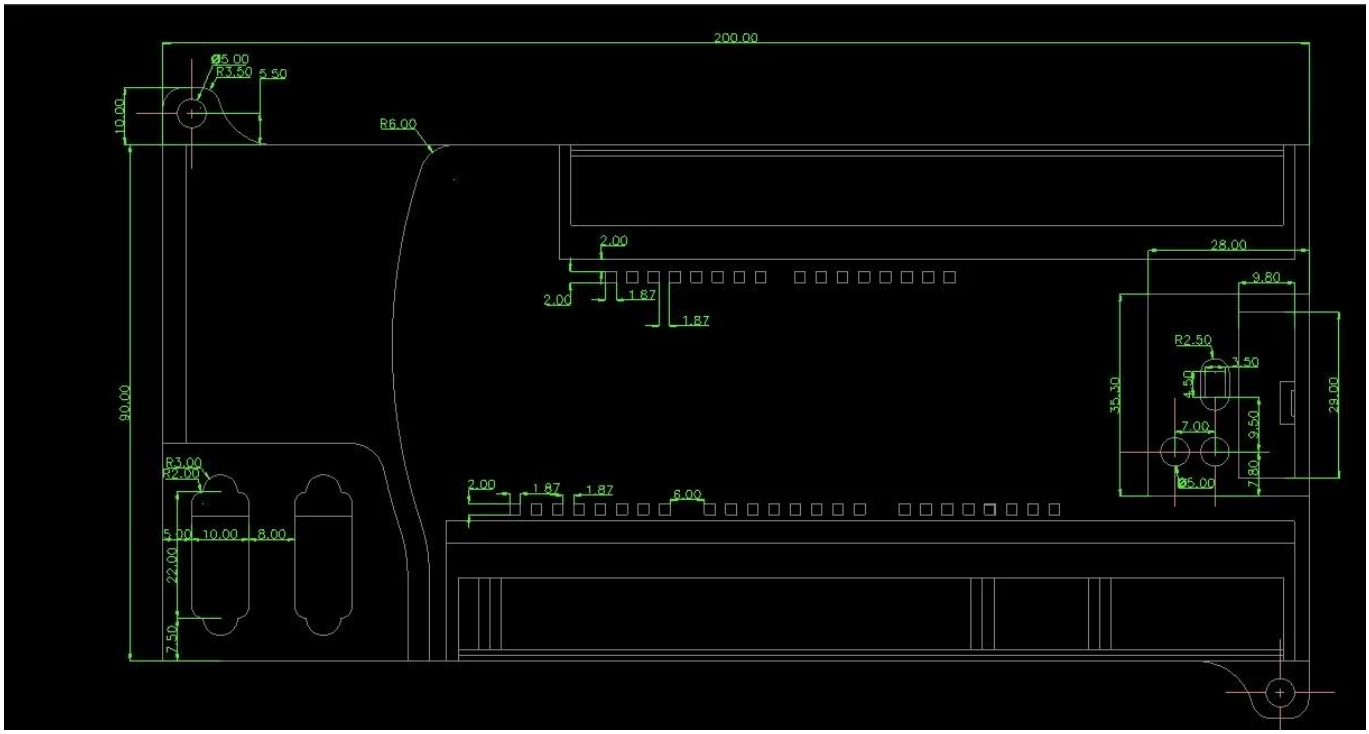
200.00
Ø5.00
R3.50
5.50
10.00
R6.00
2.00
2.00
1.87
1.87
28.00
9.80
R2.50
3.50
4.50
35.30
28.00
7.00
9.50
7.80
Ø5.00
90.00
R3.00
R2.00
2.00
1.87
1.87
6.00
5.00
10.00
8.00
22.00
7.50

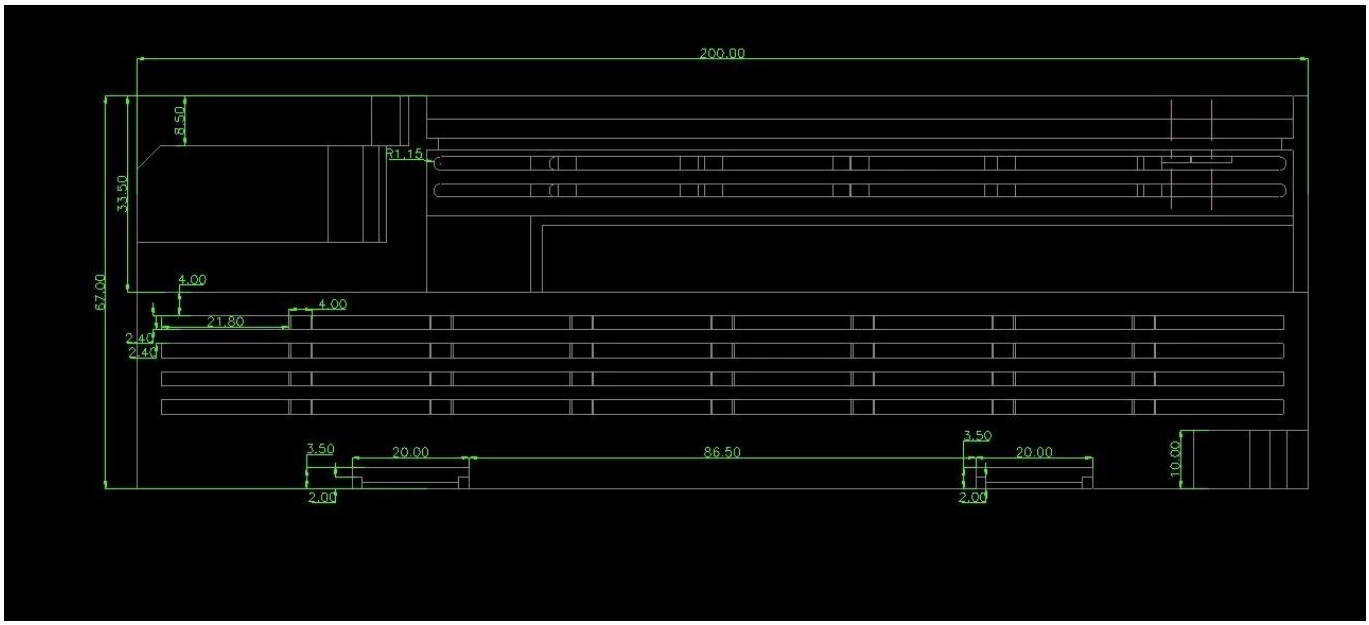
200.00
8.50
R1.15
33.50
67.00
4.00
4.00
21.80
2.40
2.40
3.50
20.00
86.50
3.50
20.00
2.00
2.00
10.00

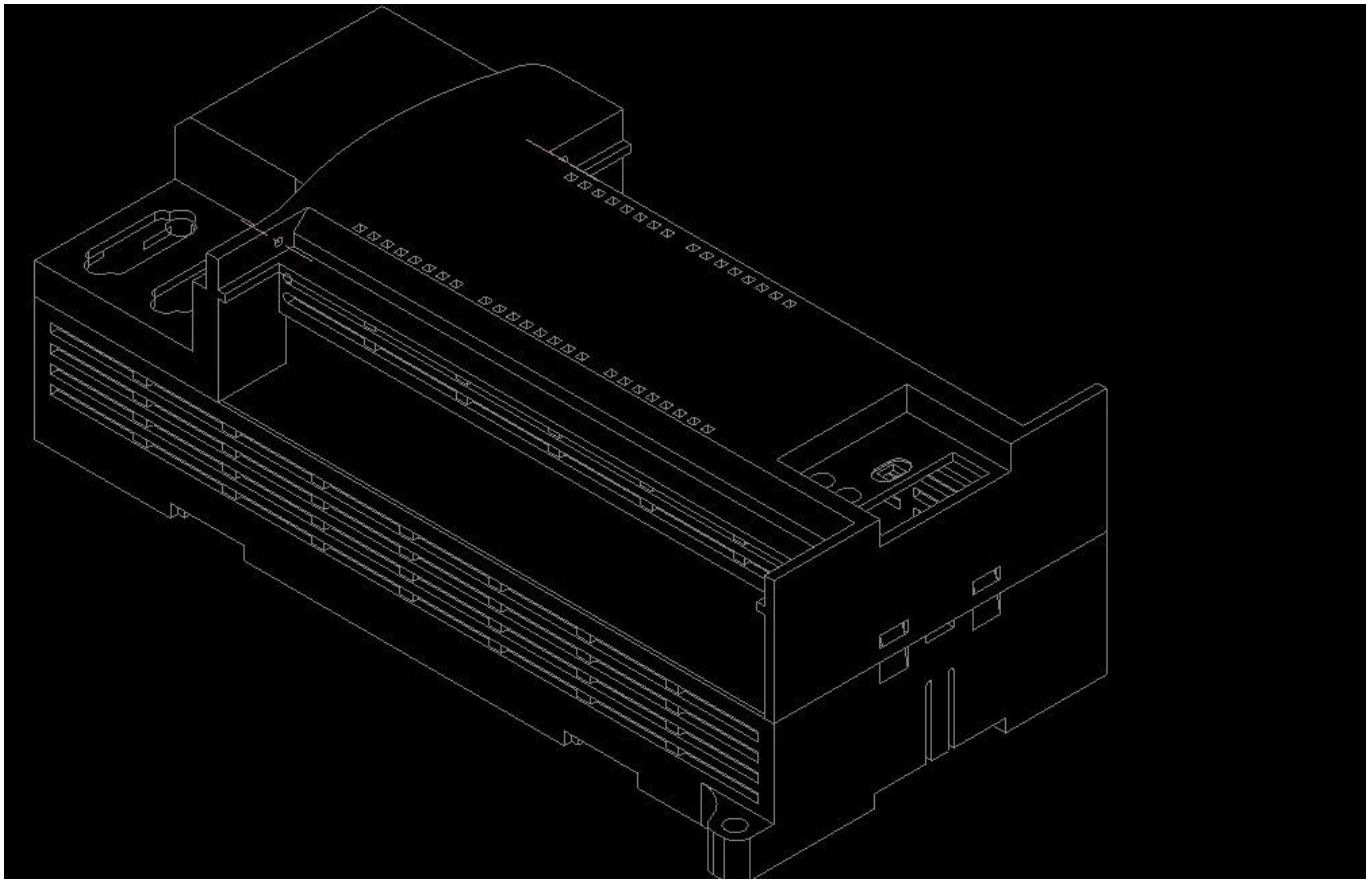

## Company Information

### Shenzhen Futian Huaqiang Electronic World OMK Electronic Sales Departmen

This complex,during long years of efforts with it's own experienced group and sole facilities for improvement of productions and promotion of products quality, is now one of the largest suppliers of all kinds of metallic and plastic enclosures in different fields of electronic,electrical,communication,medical,industrial and research prtojects purposes.

In today's industrial world and with the rapid development of all industries,the need of these products is sensed more than ever.Therefore by offering the best quality and service,we try to meet these needs and help you to reach your ideals.

## Exhibition

## Factory and showroom

## Упаковка & Доставка

Упаковывая детали: Стандартная коробка экспорта.
Деталь поставки: 3-15days, различное количество различное время выполнения.